LineLazer V 250SPS and 250DC Self-Propelled Line Striper

3A3393B
EN

For the application of line striping materials.
For professional use only.
For outdoor use only.
Not for use in explosive atmospheres or hazardous locations.

Maximum Operating Speed: 10 mph (16 kph)
Maximum Operating Pressure: 3300 psi (22.8 MPa, 228 bar)

Important Safety Instructions

Read all warnings and instructions in this manual and in related manuals.
Be familiar with the controls and the proper usage of the equipment.
Save these instructions.

Model	Guns	Pressurized Bead System	Description
17H471	2	No	LLV 250DC
17H472	3	No	LLV 250DC
17H473	2	Yes - 2 Tank	LLV 250DC
17H474	3	Yes - 2 Tank	LLV 250DC
17H466	1	No	LLV 250SPS
17H467	2	No	LLV 250SPS
17H468	1	Yes - 1 Tank	LLV 250SPS
17J951	2	Yes - 1 Tank	LLV 250SPS
17H469	2	Yes - 2 Tank	LLV 250SPS

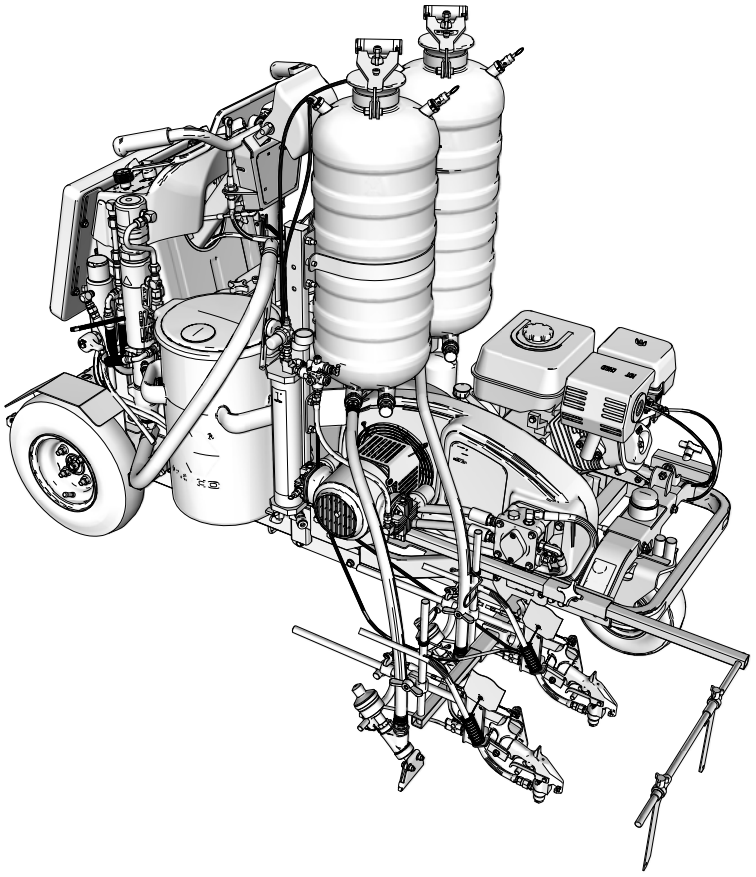

Related Manuals:	
3A3394	Repair / Parts
311254	Gun
309277	Pump
3A3428	Auto-Layout Applications Methods
332230	Pressurized Bead System (PBS)

Use only genuine Graco replacement parts.
The use of non-Graco replacement parts may void warranty.

Table of Contents

Warnings 3
Battery Disposal 6
Component Identification (LLV 250DC Shown) . . 7
Component Identification (Controls) 8
Grounding Procedure (For Flammable Materials Only) 9
Pressure Relief Procedure 9
Setup/Startup 10
SwitchTip and Guard Assembly 12
Gun Placement 13
Install Guns 13
Position Guns 13
Select Guns (Standard Series) 13
Gun Positions Chart 14
Gun Arm Mounts 15
Change Gun Position (Front and Back) 15
Change Gun Position (Left and Right) 15
Installation 16
Gun Cable Adjustment 16
Change Trigger Position 17
Cleanup 18
Driving Instructions 19
Parking/Emergency Brake 20
Drive Engagement 20
Straight Line Adjustment 20
Handle Bar Height Adjustment 21
Platform Storage Position 21
Front Pad Adjustment 21
Smart Control Operation 22
Menu Tree 22
Control Features 23
Main Menus 24
Initial Setup 25
Striping Mode (LLV 250DC Shown) 27
Measure Mode 28
Layout Mode 29
Stall Calculator 30
Angle Calculator 31
Setup/Information 32
Information 33
Information (2) 34
World Symbol Key 36
Hydraulic Oil/Filter Change 37
Removal 37
Installation 37
Technical Specifications 38
Graco Standard Warranty 42

Warnings

The following warnings are for the setup, use, grounding, maintenance, and repair of this equipment. The exclamation point symbol alerts you to a general warning and the hazard symbols refer to procedure-specific risks. When these symbols appear in the body of this manual or on warning labels, refer back to these Warnings. Product-specific hazard symbols and warnings not covered in this section may appear throughout the body of this manual where applicable.

⚠WARNING

TRAFFIC HAZARD

Being struck by other vehicles may result in serious injury or death.

- Do not operate in traffic.
- Use appropriate traffic control in all traffic areas.
- Follow local highway and transportation regulations for traffic control (for example: Manual on Uniform Traffic Control Devices, U.S. Department of Transportation).

FIRE AND EXPLOSION HAZARD

Flammable fumes, such as solvent and paint fumes, in **work area** can ignite or explode. Paint or solvent flowing through the equipment can cause static sparking. To help prevent fire and explosion:

- Use equipment only in well ventilated area.
- Do not fill fuel tank while engine is running or hot; shut off engine and let it cool. Fuel is flammable and can ignite or explode if spilled on hot surface.
- Eliminate all ignition sources; such as pilot lights, cigarettes, portable electric lamps, and plastic drop cloths (potential static arc).
- Ground all equipment in the work area. See **Grounding** instructions.
- Never spray or flush solvent at high pressure.
- Keep work area free of debris, including solvent, rags and gasoline.
- Do not plug or unplug power cords, or turn power or light switches on or off when flammable fumes are present.
- Use only grounded hoses.
- Hold gun firmly to side of grounded pail when triggering into pail. Do not use pail liners unless they are antistatic or conductive.
- **Stop operation immediately** if static sparking occurs or you feel a shock. Do not use equipment until you identify and correct the problem.
- Keep a working fire extinguisher in the work area.

SKIN INJECTION HAZARD

High-pressure spray is able to inject toxins into the body and cause serious bodily injury. In the event that injection occurs, **get immediate surgical treatment.**

- Do not aim the gun at, or spray any person or animal.
- Keep hands and other body parts away from the discharge. For example, do not try to stop leaks with any part of the body.
- Always use the nozzle tip guard. Do not spray without nozzle tip guard in place.
- Use Graco nozzle tips.
- Use caution when cleaning and changing nozzle tips. In the case where the nozzle tip clogs while spraying, follow the **Pressure Relief Procedure** for turning off the unit and relieving the pressure before removing the nozzle tip to clean.
- Equipment maintains pressure after power is shut off. Do not leave the equipment energized or under pressure while unattended. Follow the **Pressure Relief Procedure** when the equipment is unattended or not in use, and before servicing, cleaning, or removing parts.
- Check hoses and parts for signs of damage. Replace any damaged hoses or parts.
- This system is capable of producing 3300 psi. Use Graco replacement parts or accessories that are rated a minimum of 3300 psi.
- Always engage the trigger lock when not spraying. Verify the trigger lock is functioning properly.
- Verify that all connections are secure before operating the unit.
- Know how to stop the unit and bleed pressure quickly. Be thoroughly familiar with the controls.

⚠WARNING

CARBON MONOXIDE HAZARD

Exhaust contains poisonous carbon monoxide, which is colorless and odorless. Breathing carbon monoxide can cause death.

- Do not operate in an enclosed area.

EQUIPMENT MISUSE HAZARD

Misuse can cause death or serious injury.

- Do not operate the unit when fatigued or under the influence of drugs or alcohol.
- Do not exceed the maximum working pressure or temperature rating of the lowest rated system component. See **Technical Data** in all equipment manuals.
- Use fluids and solvents that are compatible with equipment wetted parts. See Technical Data in all equipment manuals. Read fluid and solvent manufacturer's warnings. For complete information about your material, request Safety Data Sheet (SDS) from distributor or retailer.
- Do not leave the work area while equipment is energized or under pressure.
- Turn off all equipment and follow the **Pressure Relief Procedure** when equipment is not in use.
- Check equipment daily. Repair or replace worn or damaged parts immediately with genuine manufacturer's replacement parts only.
- Do not alter or modify equipment. Alterations or modifications may void agency approvals and create safety hazards.
- Make sure all equipment is rated and approved for the environment in which you are using it.
- Use equipment only for its intended purpose. Call your distributor for information.
- Route hoses and cables away from traffic areas, sharp edges, moving parts, and hot surfaces.
- Do not kink or over bend hoses or use hoses to pull equipment.
- Keep children and animals away from work area.
- Comply with all applicable safety regulations.

PRESSURIZED ALUMINUM PARTS HAZARD

Use of fluids that are incompatible with aluminum in pressurized equipment can cause serious chemical reaction and equipment rupture. Failure to follow this warning can result in death, serious injury, or property damage.

- Do not use 1,1,1-trichloroethane, methylene chloride, other halogenated hydrocarbon solvents or fluids containing such solvents.
- Do not use chlorine bleach.
- Many other fluids may contain chemicals that can react with aluminum. Contact your material supplier for compatibility.

MOVING PARTS HAZARD

Moving parts can pinch, cut or amputate fingers and other body parts.

- Keep clear of moving parts.
- Do not operate equipment with protective guards or covers removed.
- Pressurized equipment can start without warning. Before checking, moving, or servicing equipment, follow the **Pressure Relief Procedure** and disconnect all power sources.

ENTANGLEMENT HAZARD

Rotating parts can cause serious injury.

- Keep clear of moving parts.
- Do not operate equipment with protective guards or covers removed.
- Do not wear loose clothing, jewelry or long hair while operating equipment.
- Equipment can start without warning. Before checking, moving, or servicing equipment, follow the **Pressure Relief Procedure** and disconnect all power sources.

⚠WARNING

TOXIC FLUID OR FUMES HAZARD

Toxic fluids or fumes can cause serious injury or death if splashed in the eyes or on skin, inhaled, or swallowed.

- Read Safety Data Sheet (SDS) to know the specific hazards of the fluids you are using.
- Store hazardous fluid in approved containers, and dispose of it according to applicable guidelines.

BURN HAZARD

Equipment surfaces and fluid that's heated can become very hot during operation. To avoid severe burns:

- Do not touch hot fluid or equipment.

PERSONAL PROTECTIVE EQUIPMENT

Wear appropriate protective equipment when in the work area to help prevent serious injury, including eye injury, hearing loss, inhalation of toxic fumes, and burns. This protective equipment includes but is not limited to:

- Protective eyewear, and hearing protection.
- Respirators, protective clothing, and gloves as recommended by the fluid and solvent manufacturer.

BATTERY HAZARD

The battery may leak, explode, cause burns, or cause an explosion if mishandled. Contents of an open battery can cause severe irritation and/or chemical burns. If on skin, wash with soap and water. If in eyes, flush with water for at least 15 minutes and get immediate medical attention.

- Only use the battery type specified for use with the equipment. See **Technical Data**.
- Replace battery only in well-ventilated area and away from flammable or combustible materials, including paints and solvents.
- Do not dispose of battery in fire or heat above 50°C (122°F). The battery is capable of exploding.
- Do not throw into fire.
- Do not expose battery to water or rain.
- Do not disassemble, crush, or penetrate the battery.
- Do not use or charge a battery that is cracked or damaged.
- Follow local ordinances and/or regulations for disposal.

CALIFORNIA PROPOSITION 65

The engine exhaust from this product contains a chemical known to the State of California to cause cancer, birth defects or other reproductive harm.

This product contains a chemical known to the State of California to cause cancer, birth defects or other reproductive harm. Wash hands after handling.

Battery Disposal

Do not place batteries in the trash. Recycle batteries according to local regulations. To find a recycling location in the USA and Canada call 1-800-822-8837 or go to www.call2recycle.org.

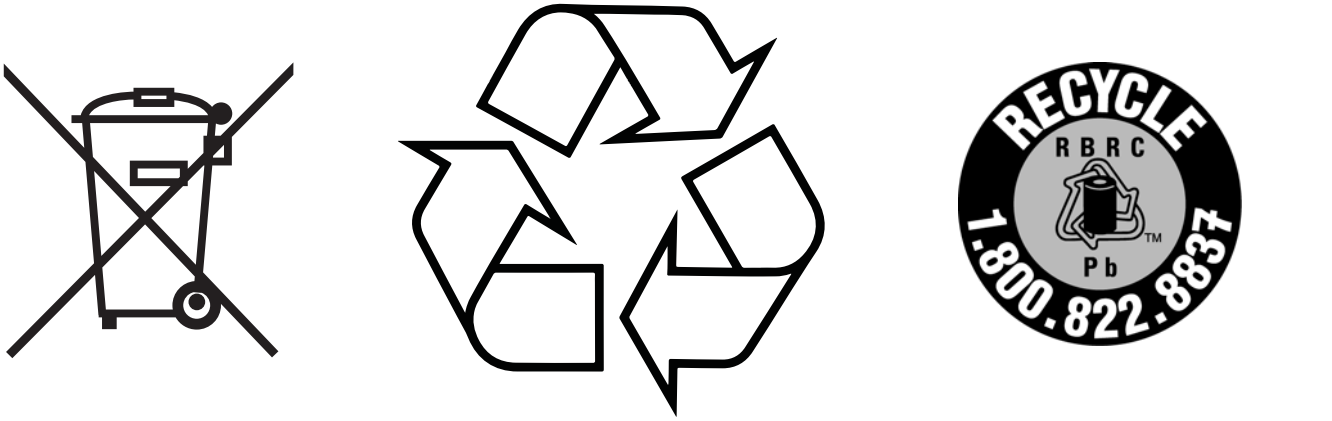

Component Identification (LLV 250DC Shown)

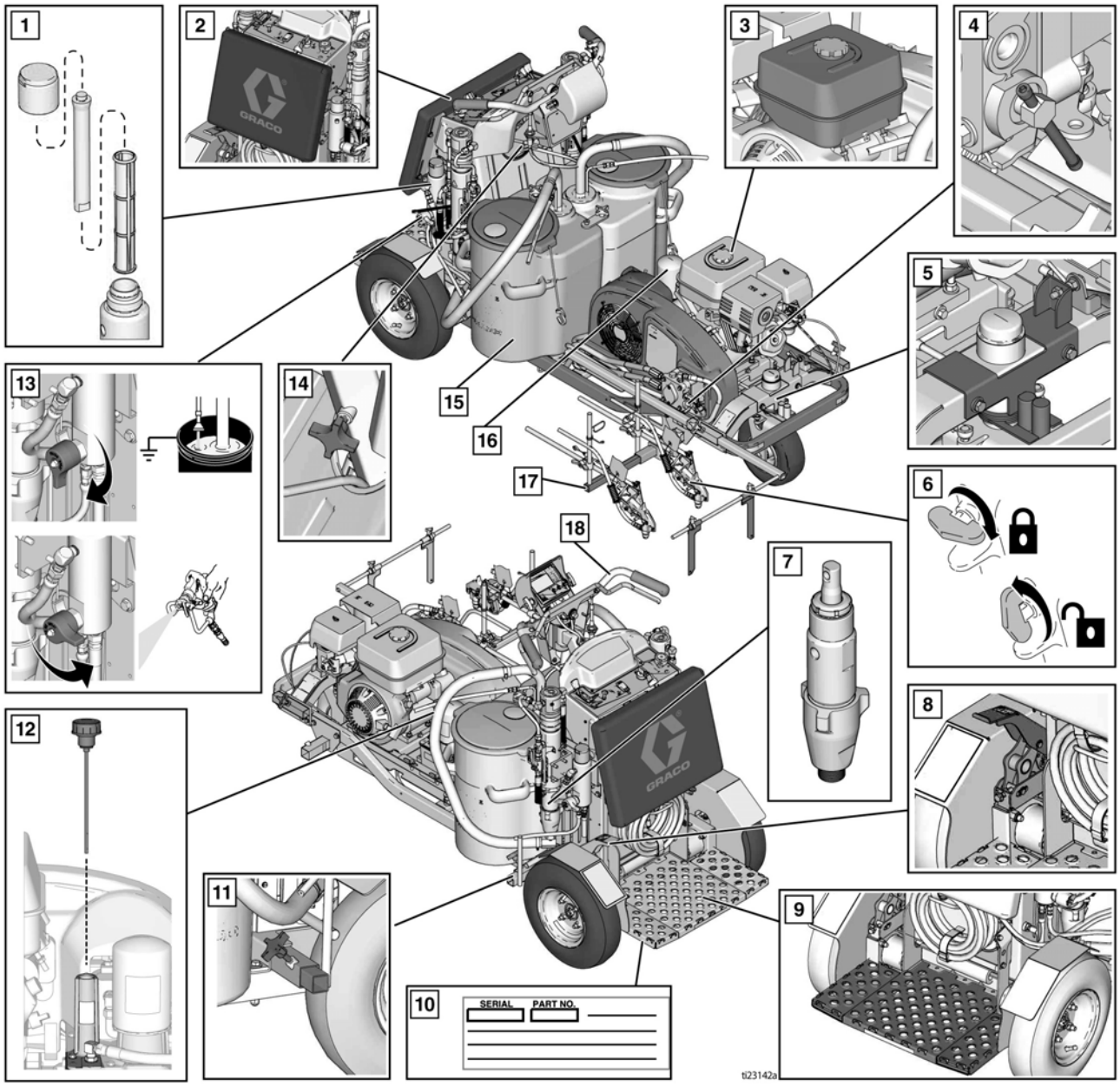

1	Paint filter, both sides
2	Adjustable pad
3	Engine fuel cap
4	Wheel motor bypass valve
5	Straight line adjuster
6	Gun trigger lock
7	Displacement pump, both sides
8	Brake
9	Operator platform

10	Serial label under operator platform
11	Rear gun arm mount, both sides
12	Hydraulic fill cap/dipstick
13	Prime/drain valve, both sides
14	Handle bar height adjustment knob
15	Two paint hoppers (15 gallon/56 liter)
16	Hydraulic oil filter
17	Front gun mount, both sides
18	Steering handle

*LLV 250SPS has only 1 paint hopper and 1 pump.

Component Identification (Controls)

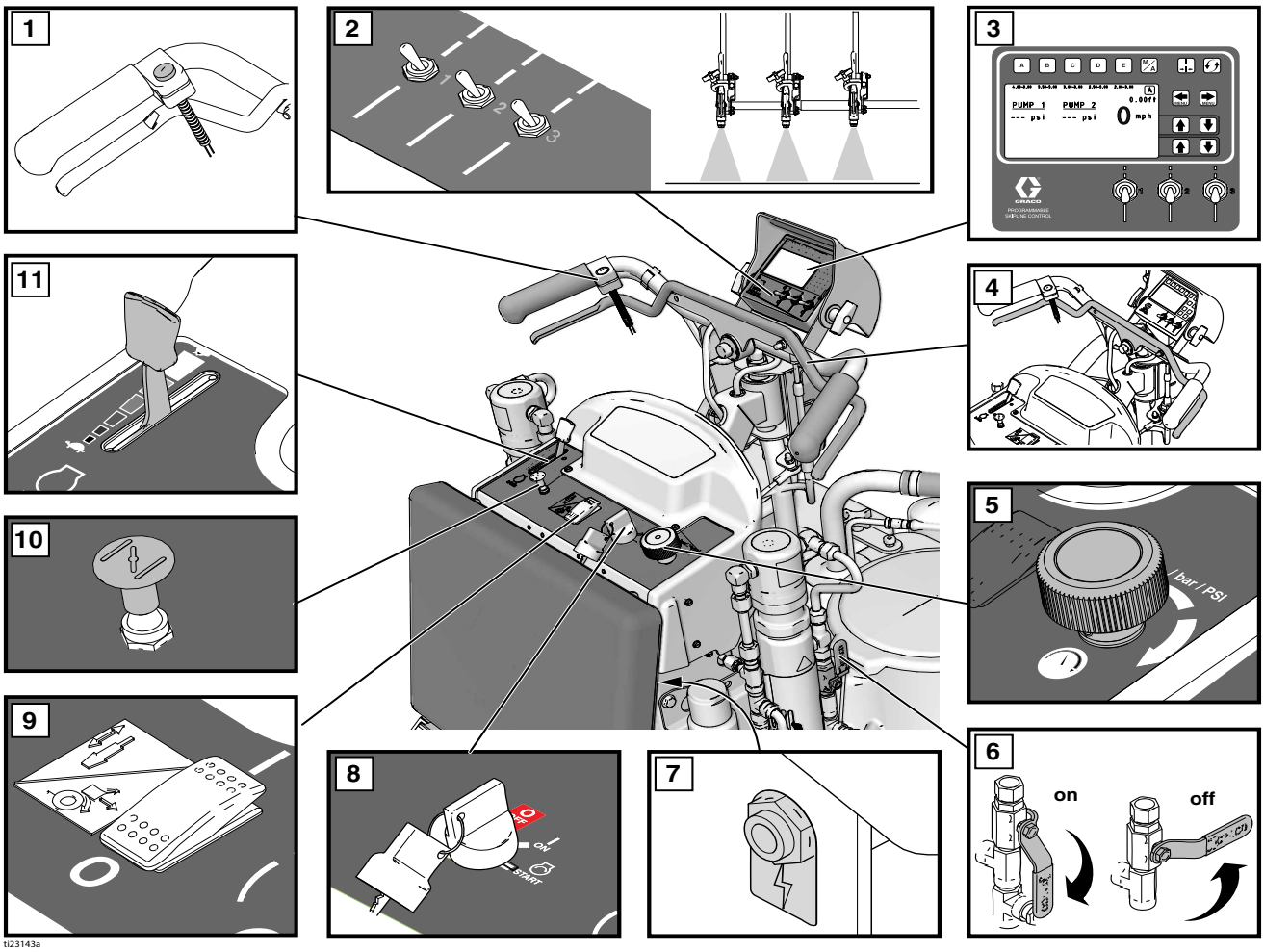

1	Gun trigger control
2	Gun 1, 2, 3 selector
3	Display
4	Forward/reverse lever
5	Pressure control
6	Hydraulic pump valve, both sides

7	12V accessory jack
8	Engine key switch, OFF - ON - Start
9	Engine clutch switch
10	Engine choke
11	Engine throttle

Grounding Procedure
(For Flammable Materials Only)

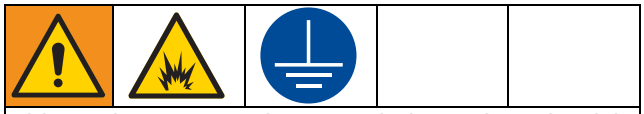

This equipment must be grounded to reduce the risk of static sparking. Static sparking can cause fumes to ignite or explode. Grounding provides an escape wire for the electric current.

1. Position striper so that the tires are not on pavement.
2. Striper is shipped with a grounding clamp. Grounding clamp must attach to grounded object (e.g. metal sign post).

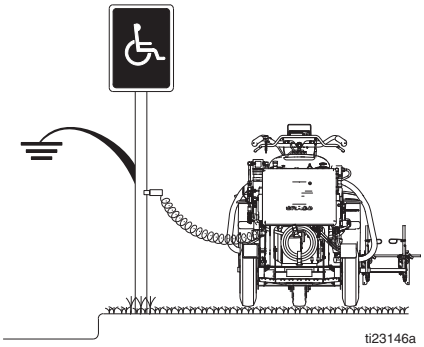

Pressure Relief Procedure

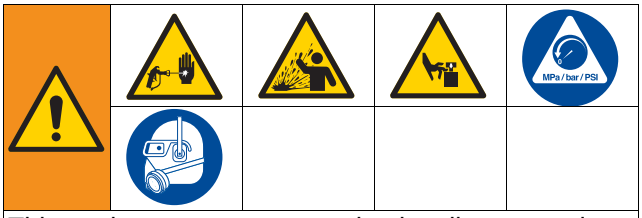

This equipment stays pressurized until pressure is manually relieved. To help prevent serious injury from pressurized fluid, such as skin injection, splashing fluid and moving parts, follow the Pressure Relief Procedure when you stop dispensing and before cleaning, checking, or servicing the equipment.

1. Perform **Grounding Procedure** if using flammable materials.
2. Set pump valve(s) to **OFF** (250SPS has one pump valve; 250DC has two pump valves). Turn engine **OFF**.

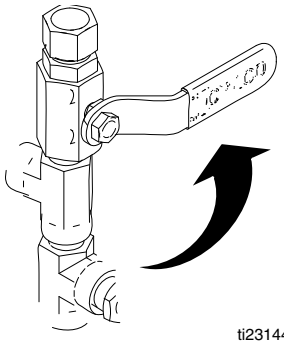

3. Turn pressure control to lowest setting. Trigger all guns to relieve pressure.

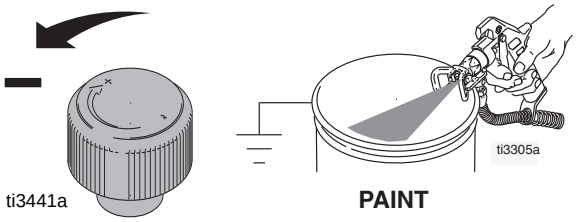

4. Engage all gun trigger locks. Turn prime valve(s) down (250SPS has one prime valve; 250DC has two prime valves).

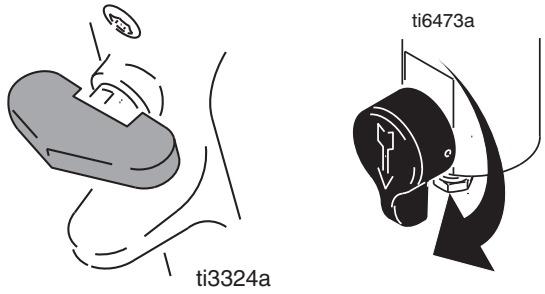

5. If you suspect the spray tip or hose is clogged or that pressure has not been fully relieved:
   a. VERY SLOWLY loosen the tip guard retaining nut or the hose end coupling to relieve pressure gradually.
   b. Loosen the nut or coupling completely.
   c. Clear the obstruction in the hose or tip.

Setup/Startup

This equipment stays pressurized until pressure is manually relieved. To help prevent serious injury from pressurized fluid, such as skin injection, splashing fluid and moving parts, follow the Pressure Relief Procedure when you stop spraying and before cleaning, checking, or servicing the equipment.

1. Perform **Pressure Relief Procedure**, page 9.
2. Perform **Grounding Procedure (For Flammable Materials Only)**, page 9 if using flammable materials.
3. Fill throat packing nut with Throat Seal Liquid (TSL) to decrease packing wear.

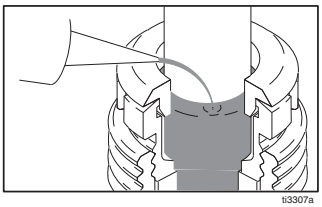

4. Check engine oil level. Add SAE 10W-30 (summer) or 5W-30 (winter). See engine manual.

5. Fill fuel tank.

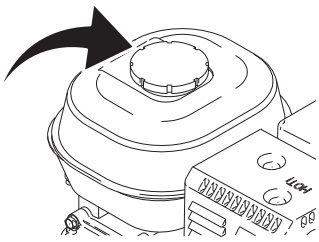

6. Set pump valve(s) to **OFF (**250SPS has one pump valve; 250DC has two pump valves).

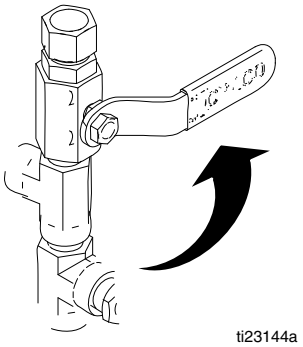

7. If removed, install strainer(s).

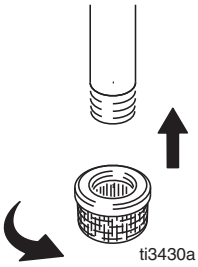

8. Turn prime valve(s) down (250SPS has one prime valve; 250DC has two prime valves). Turn pressure control counterclockwise to lowest pressure.

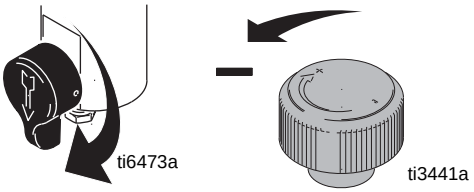

NOTE: Minimum hose size allowable for proper sprayer operation is 3/8 in. x 11 ft (9.5mm x 3.3m).

9. Place siphon tube set(s) in grounded metal pail partially filled with flushing fluid. Attach ground wire to true earth ground. Use water to flush water-base paint and mineral spirits to flush oil-base paint and storage oil.

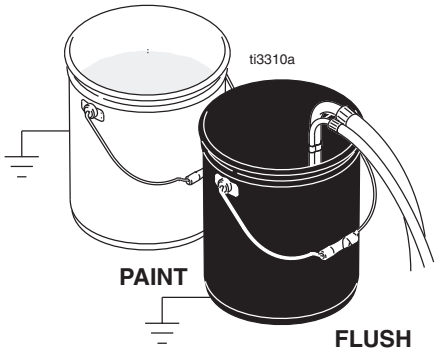

10. Apply brake.

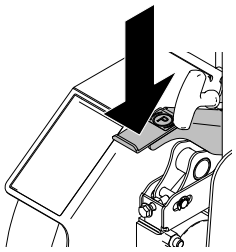

ti18550a

11. Start engine:

    a. Move fuel valve to open.

ti3312a

    b. Move choke to closed.

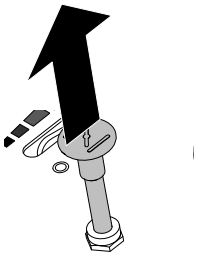

ti18561a

    c. Set throttle to fast.

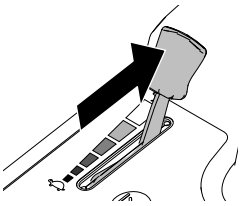

ti18568a

    d. Turn engine key switch clockwise to START.

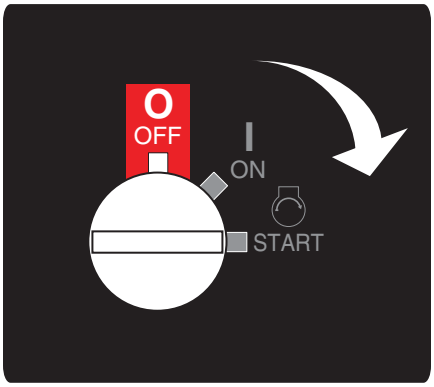

ti23147a

    e. After engine starts, move choke to open.

ti18563a

12. Set engine clutch switch to ON.

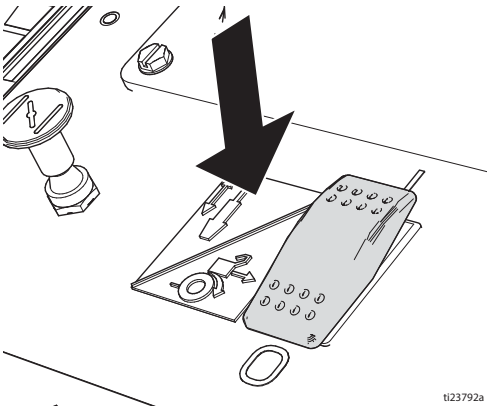

ti23792a

13. Set throttle to desired setting.

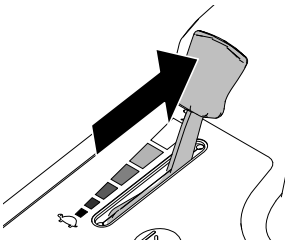

ti18568a

14. Set pump valve(s) **ON** (250SPS has one pump valve; 250DC has two pump valves). Pumps are now active.

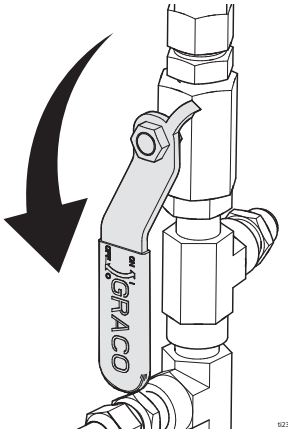

15. Increase pressure control enough to start pump. Allow fluid to circulate for 15 seconds.

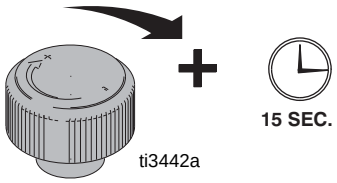

16. Turn pressure down, turn both prime valves horizontal. Disengage gun trigger lock.

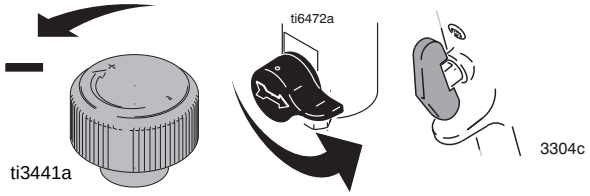

17. Hold all guns against a grounded metal flushing pail. Trigger guns and increase fluid pressure slowly until pumps run smoothly.

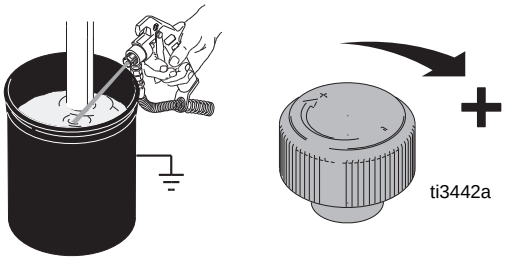

High-pressure spray is able to inject toxins into the body and cause serious bodily injury. Do not stop leaks with hand or rag.

18. Inspect fittings for leaks. If leaks occur, turn sprayer OFF immediately. Perform **Pressure Relief Procedure**. Tighten leaky fittings. Repeat **Startup**, steps 1 - 17. If no leaks, continue to trigger gun until system is thoroughly flushed. Proceed to step 18.

19. Place siphon tube in paint pails.

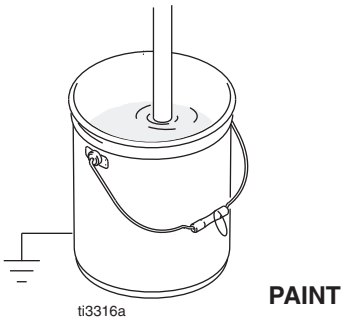

20. Trigger all guns again into a flushing fluid pail until paint appears. Assemble tips and guards.

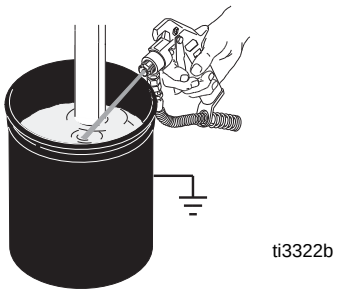

SwitchTip and Guard Assembly

1. Engage trigger lock. Use end of SwitchTip (A) to press OneSeal (B) into tip guard (D), with curve matching tip bore (C).

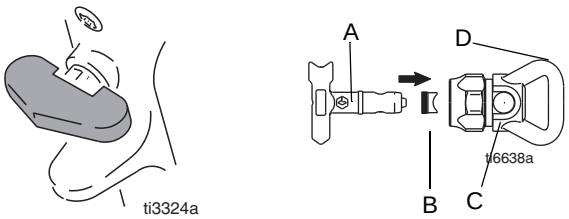

2. Insert SwitchTip in tip bore and firmly thread assembly onto gun.

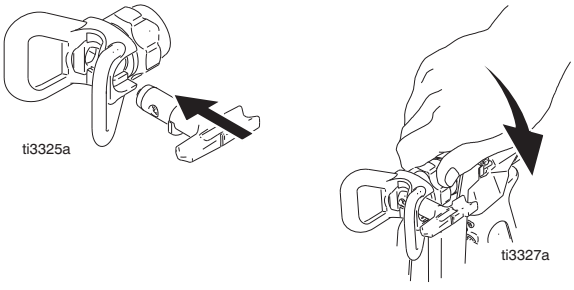

Gun Placement

Install Guns

1. Insert guns into gun holder. Tighten clamps.

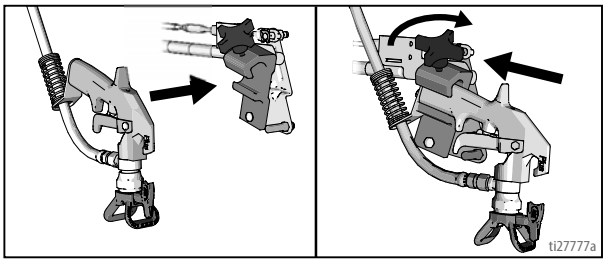

Position Guns

2. Position guns: up/down, forward/reverse, left/right. See **Gun Positions Chart**, page 17 for examples.

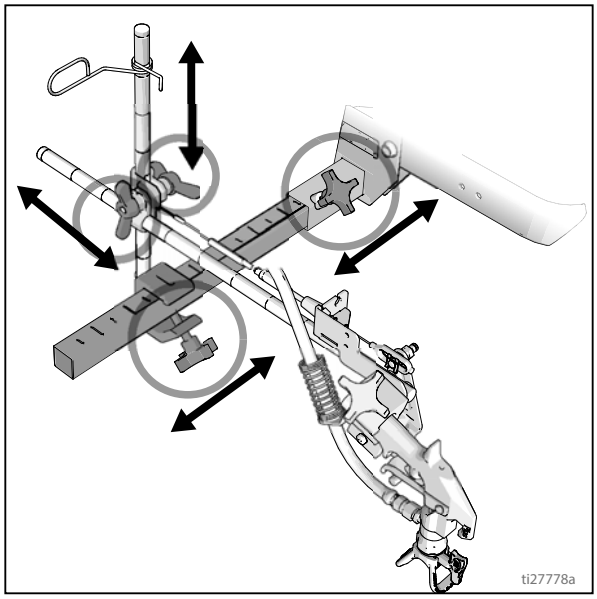

Select Guns (Standard Series)

3. Use the three gun selector switches to determine which guns are active. Each gun selector switch has 3 positions: programmed line pattern, OFF, and continuous line.

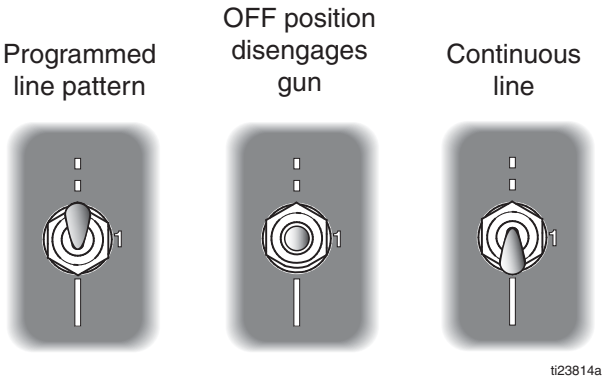

4. Use the gun trigger control to actuate guns.

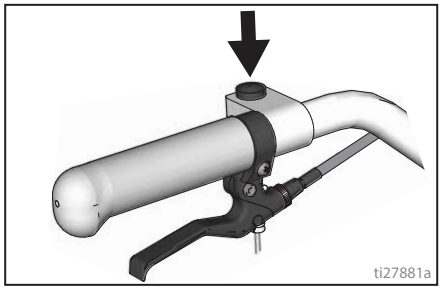

2 Examples:

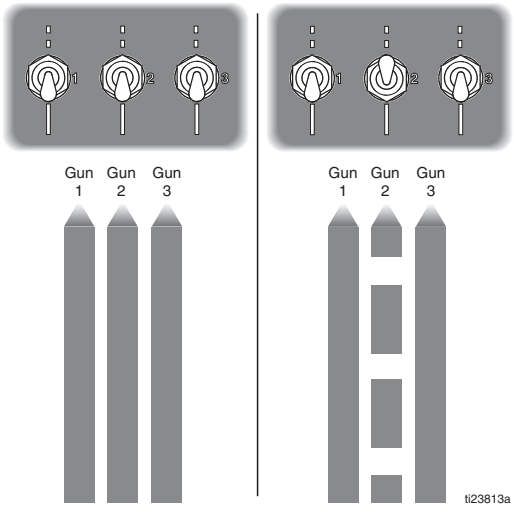

Gun Positions Chart

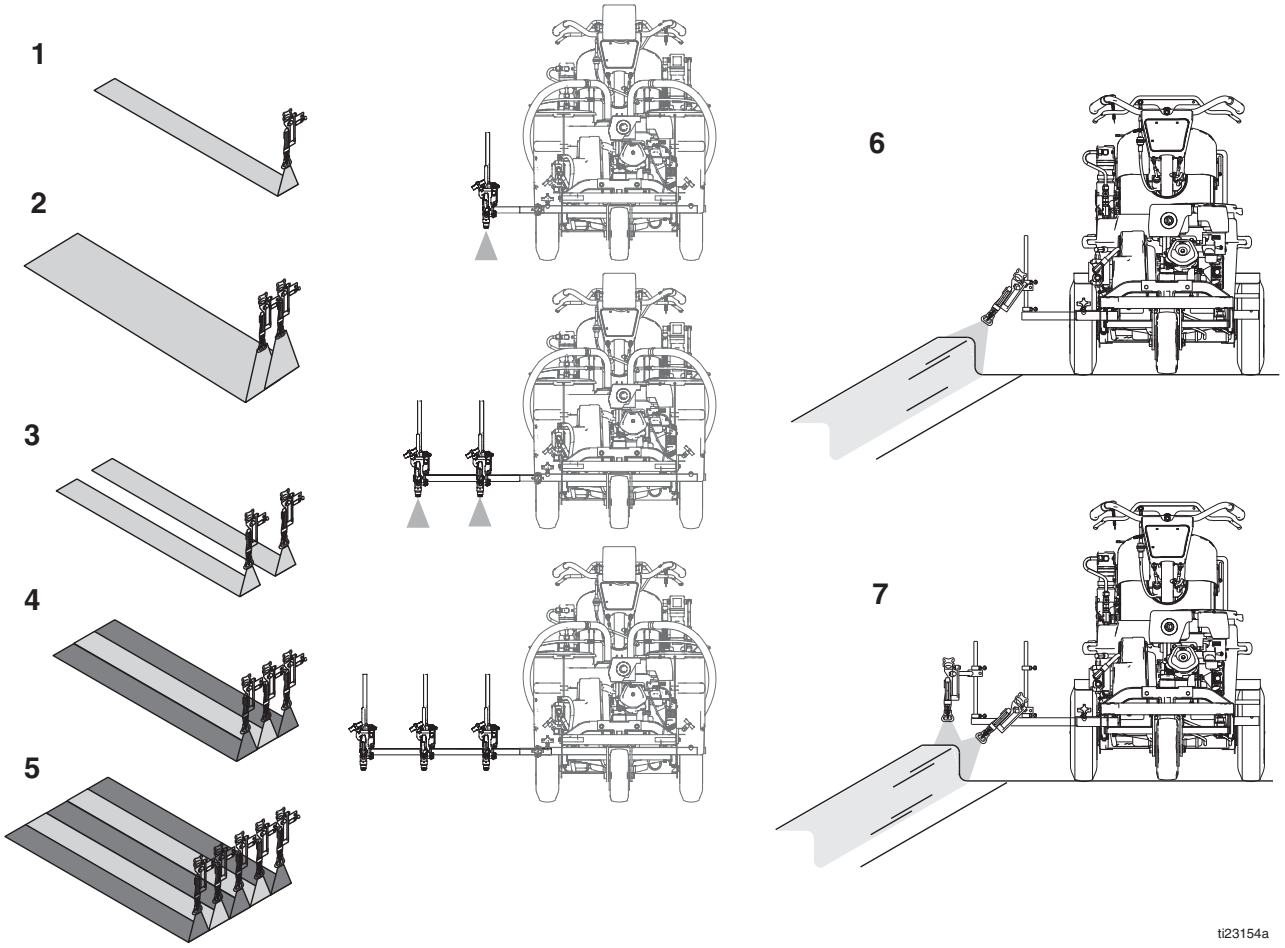

1	One line
2	One line up to 24 in. (61 cm) wide
3	Two lines
4	One line with two line highlight (250DC only)
5	Two lines with three line highlight (250DC only)
6	One gun curb
7	Two gun curb

Gun Arm Mounts

This unit is equipped with front and rear gun arm mounts on either side.

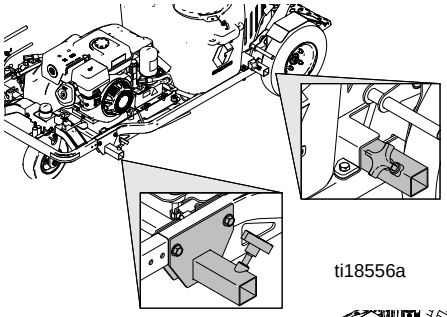

ti18556a

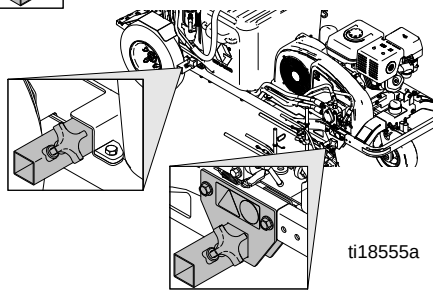

ti18555a

Change Gun Position (Front and Back)

1. Loosen gun arm knob and remove from gun arm mounting slot.

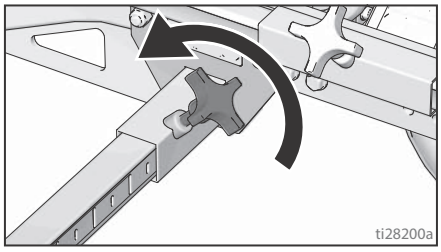

ti28200a

2. Slide gun arm assembly (including gun and hoses) out from gun arm mounting slot.

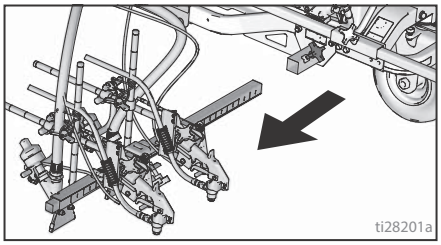

ti28201a

3. Slide gun arm assembly into desired gun arm mounting slot.

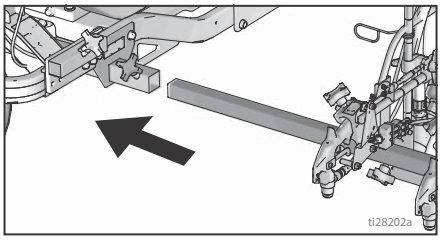

ti28202a

4. Tighten gun arm knob into gun arm mounting slot.

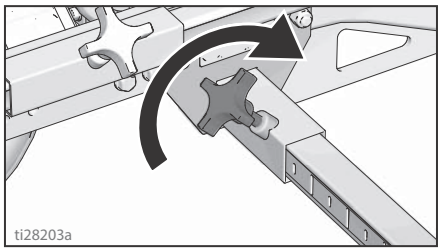

ti28203a

NOTICE

Make sure all hoses, cables, and wires are properly routed through brackets and do NOT rub on tire. Contact with tire will result in damaged hoses, cables, and wires.

Change Gun Position (Left and Right)

Removal

1. Loosen vertical gun arm knob on gun arm mounting bar and remove.

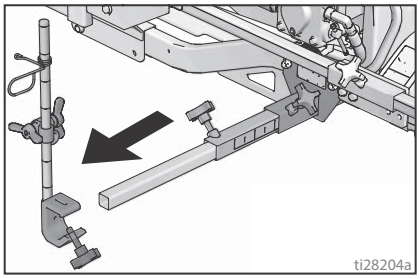

ti28204a

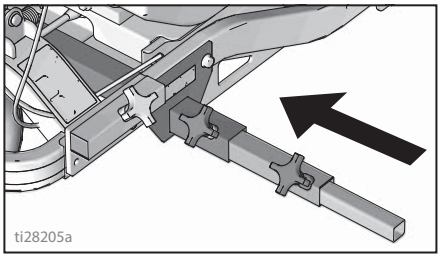

ti28205a

2. Assemble mounting bar on opposite side of the machine.

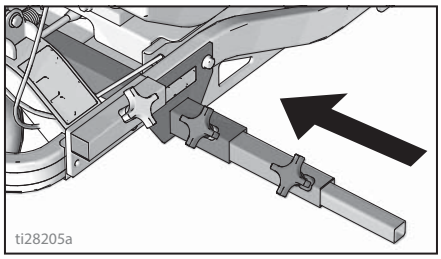

ti28205a

Installation

1. Install vertical gun mount onto gun bar.

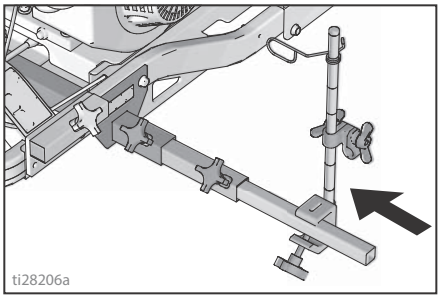

NOTE: Make sure all hoses, cables, and wires are properly routed through brackets.

Gun Cable Adjustment

Adjusting the gun cable will increase or decrease the gap between the trigger plate and the gun trigger. To adjust trigger gap, perform the steps below.

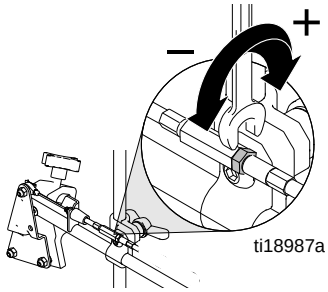

1. Use wrench to loosen locking nut on cable adjuster.

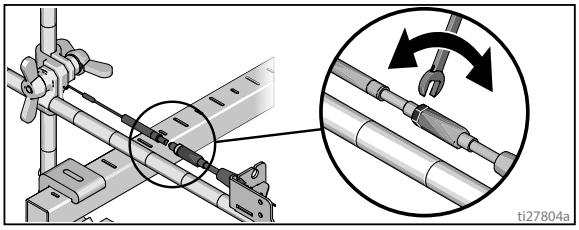

2. Loosen or tighten adjuster until desired result is achieved. **NOTE:** More thread exposed means less gap between gun trigger and trigger plate.

3. Use wrench to tighten locking nut on the adjuster.

Adding Gun Cable

This line striper is equipped with three gun actuators. Each gun actuator is capable of operating two cables. For additional (3 to 6 guns) gun installation, attach cable to the desired actuator rod.

1. Select cable end with adjuster.

2. Install exposed cable through cable bracket slot.

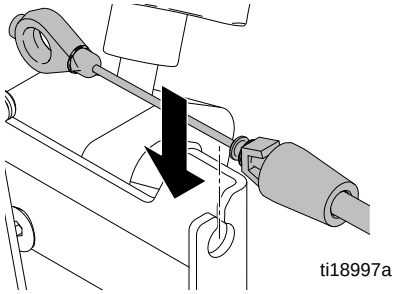

3. Insert plastic cable retainer into cable bracket hole.

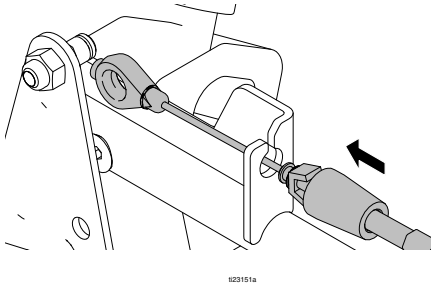

4. Install cable end onto trigger plate pin and install clip.

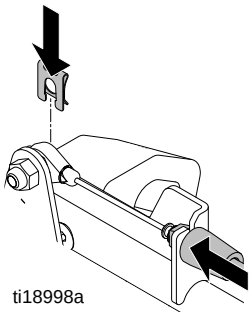

5. Route cable around unit and up through cable holes behind hose mount.

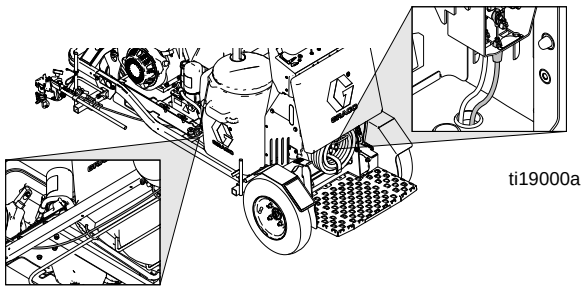

6. Route cable end loop through rectangular hole in bracket and insert plastic cable retainer into the actuator bracket. Install cable end onto actuator rod and install clip.

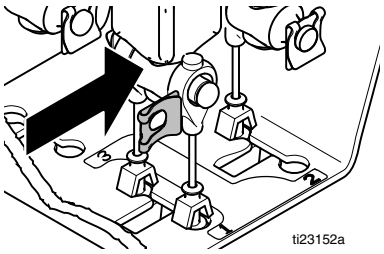

Change Trigger Position

Removal

1. Remove both hand grips from handle bar (spraying compressed air into end of handle grip works well for this).

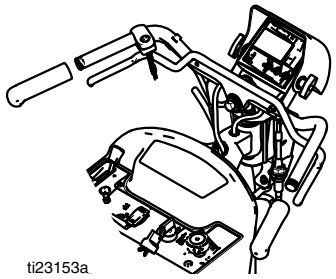

2. Use an allen wrench to loosen bolt on trigger mounting clamp.

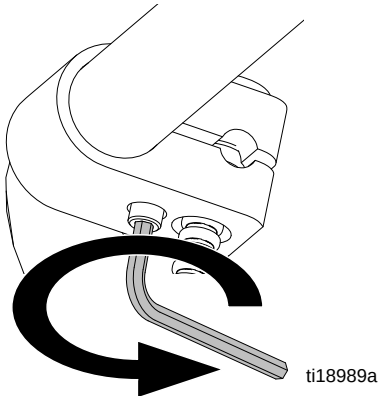

3. Remove trigger assembly from handle bar.

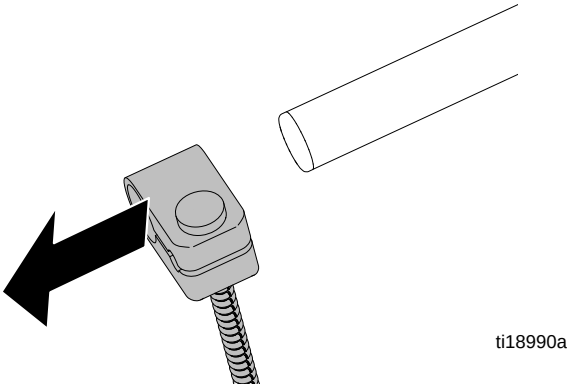

Installation

1. Route trigger wire to other side of handle bar. Make sure wire is routed behind steering column, through wire slot on steering plate, and into wire clamp on handle bar.

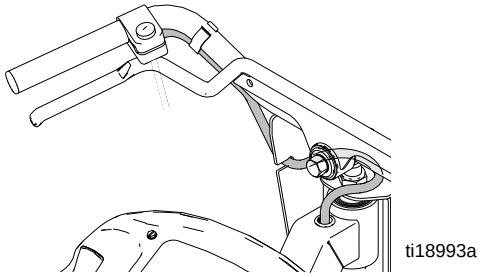

2. Install trigger assembly onto desired handle bar.

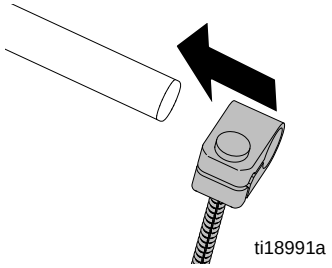

3. Use allen wrench to tighten bolt on trigger mounting clamp.

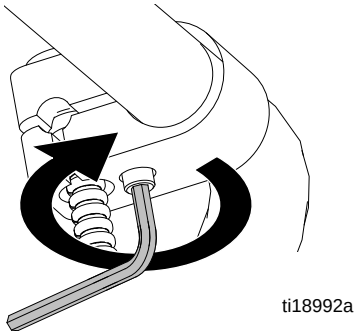

4. Replace hand grips.

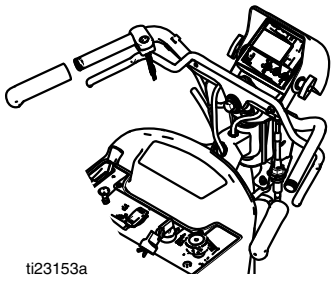

Cleanup

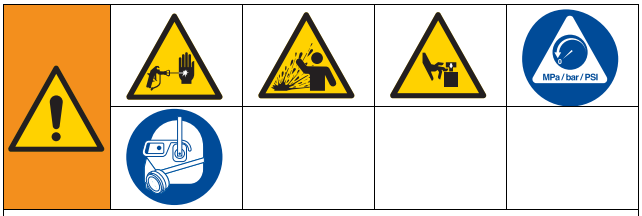

This equipment stays pressurized until pressure is manually relieved. To help prevent serious injury from pressurized fluid, such as skin injection, splashing fluid and moving parts, follow the Pressure Relief Procedure when you stop dispensing and before cleaning, checking, or servicing the equipment.

1. Perform **Pressure Relief Procedure**, page 9.
2. Remove guard and SwitchTip from all guns.

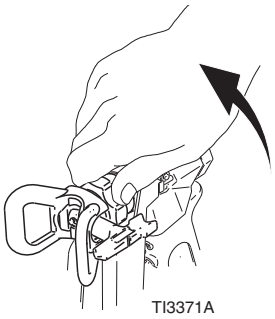

3. Unscrew cap(s), remove filter(s). Assemble without filter.

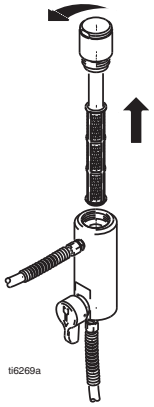

4. Clean filter, guard and SwitchTip in flushing fluid.

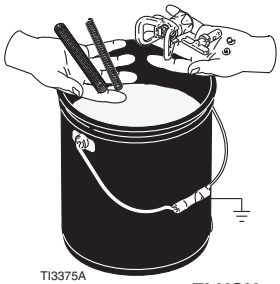

FLUSH

5. Place siphon tube set in grounded metal pail partially filled with flushing fluid. Attach ground wire to true earth ground. Perform Startup steps 11 - 17 (see page 11) to flush out paint in sprayer. Use water to flush water-base paint and mineral spirits solvent (also called white spirit) to flush oil-base paint.
6. Hold gun against paint bucket and pull trigger until water or solvent appears.

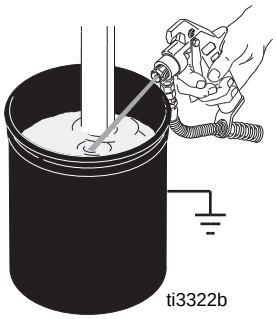

7. Move gun to solvent or water bucket. Hold gun against bucket and pull trigger until the system is thoroughly flushed.
8. Fill pump with Pump Armor and reassemble filter, guard and SwitchTip.
9. Each time you spray and store, fill throat packing nut with TSL to decrease packing wear.

Driving Instructions

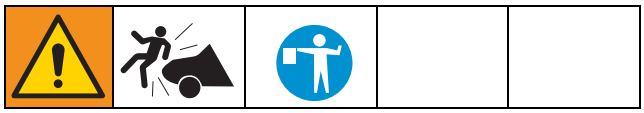

Perform startup see, **Setup/Startup**, page 10.

Use the handle bars of the LineStriper to control all motion during operation. In addition to steering the LineStriper, the handle bars also control forward and reverse movement by pulling the forward/reverse control lever.

NOTE: Make sure wheel motor bypass valve is engaged (see page 20).

To move forward: Disengage brake and slowly pull control lever on right side of handlebar.

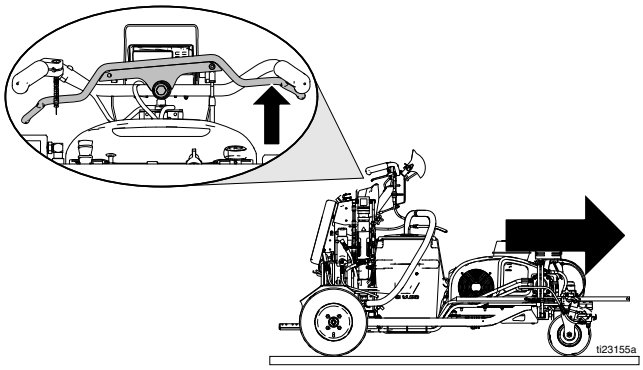

To move in reverse: Slowly pull control lever on left side of handlebar.

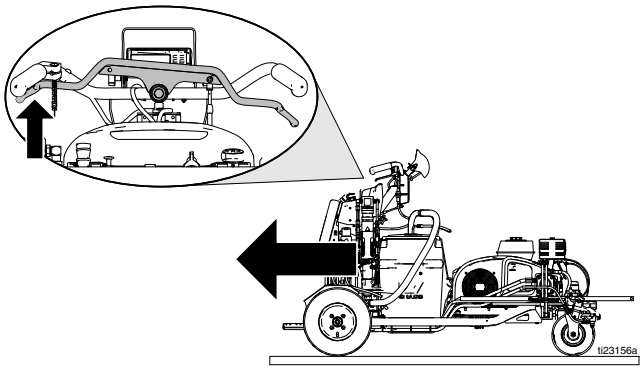

To stop: Release control lever and allow it to return to center.

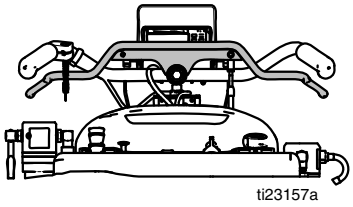

To turn right and left: Turn the handle bar right or left to steer the LineStriper.

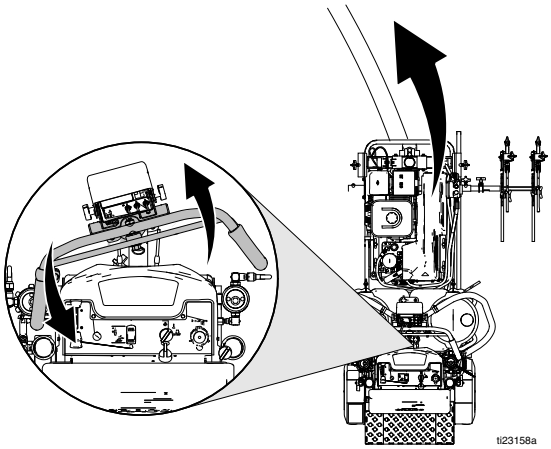

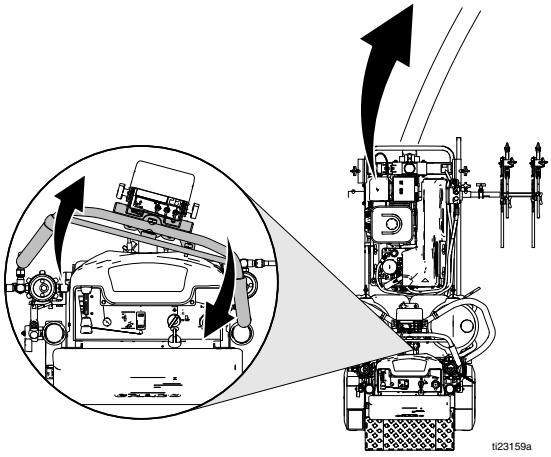

Parking/Emergency Brake

This unit is equipped with a parking brake. Always engage parking brake when not in operation. Brake may also be used to slow machine in an emergency situation.

1. Step down on the brake lever to engage parking brake.

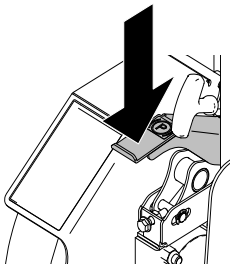

ti18550a

2. Lift brake lever up with foot to disengage parking brake.

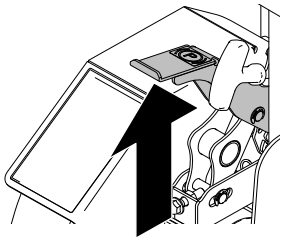

ti18565a

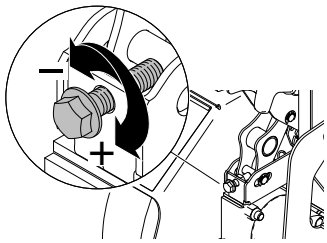

ti18548a

NOTE: Adjust screw for more or less braking force.

Drive Engagement

The wheel motor bypass valve allows the operator to disengage the wheel tension and push the unit around. Rotate one complete turn counter-clockwise to disengage.

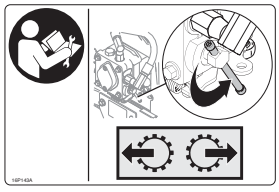

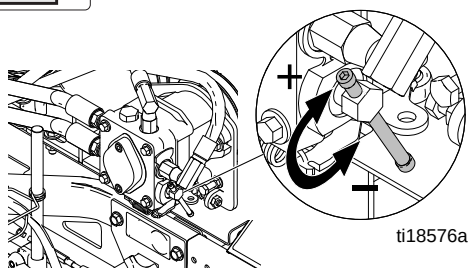

ti18576a

Straight Line Adjustment

The front wheel is set to center the unit and allow the operator to form straight lines. Over time, the wheel may become misaligned and will need to be readjusted. To re-center the front wheel, perform the following steps:

1. Loosen two bolts on the wheel alignment plate.

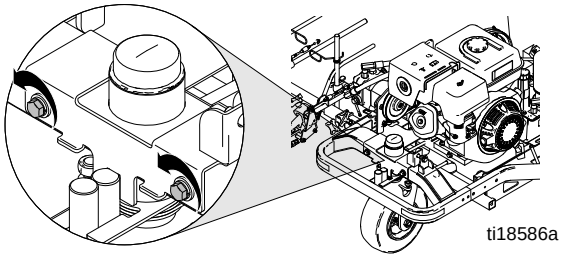

ti18586a

2. If striper arcs to the right, turn adjuster screw clockwise.

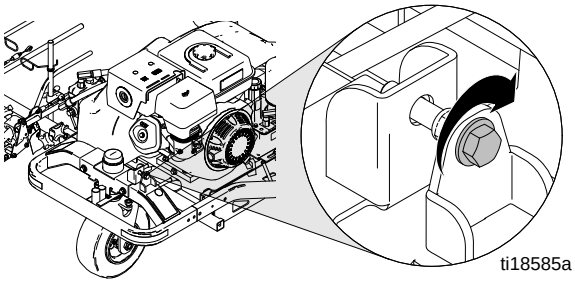

ti18585a

3. If striper arcs to the left, turn adjuster screw counter-clockwise.

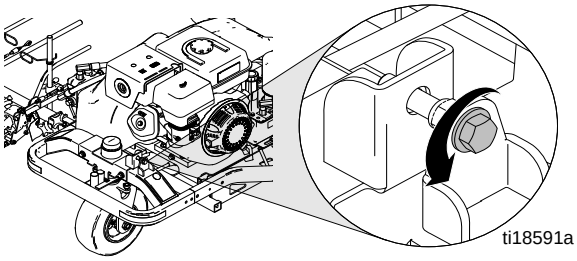

ti18591a

4. Test-drive the striper. Repeat steps 2 and 3 until striper drives straight. Tighten two bolts on wheel alignment plate to lock the new wheel setting.

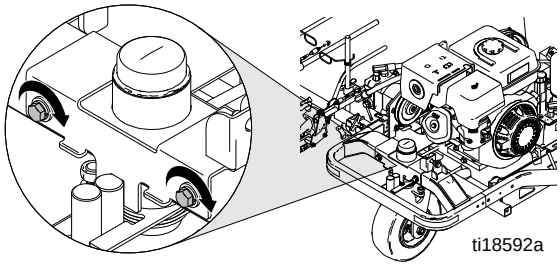

ti18592a

Handle Bar Height Adjustment

1. Loosen handlebar height adjuster lock.

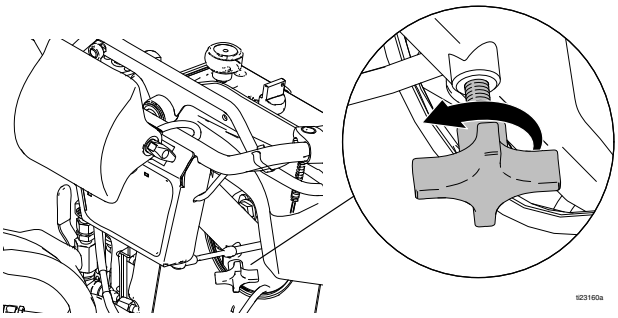

2. Raise or lower handlebars to desired height.

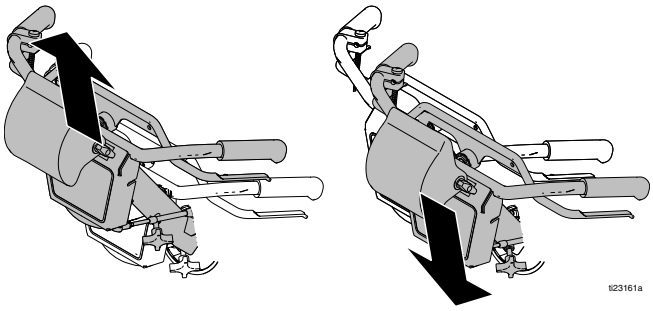

3. Tighten handlebar height adjuster lock.

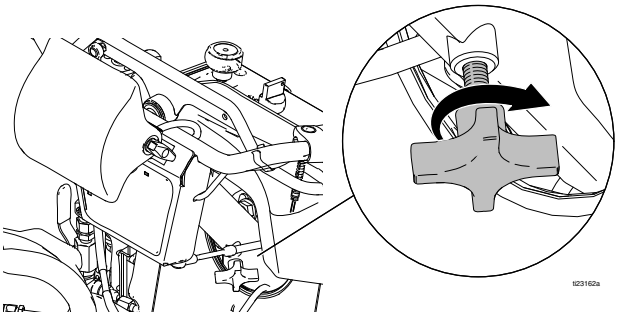

Platform Storage Position

1. Raise stand and pin self-locks.

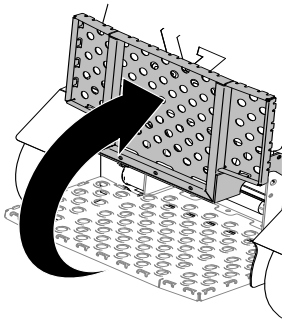

2. To lower stand, pull pin and lower stand.

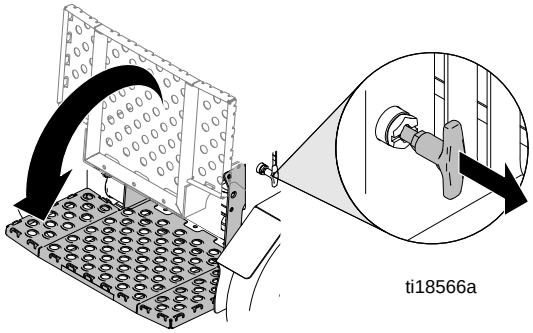

Front Pad Adjustment

1. Loosen four bolts.
2. Slide pad up or down to desired position.

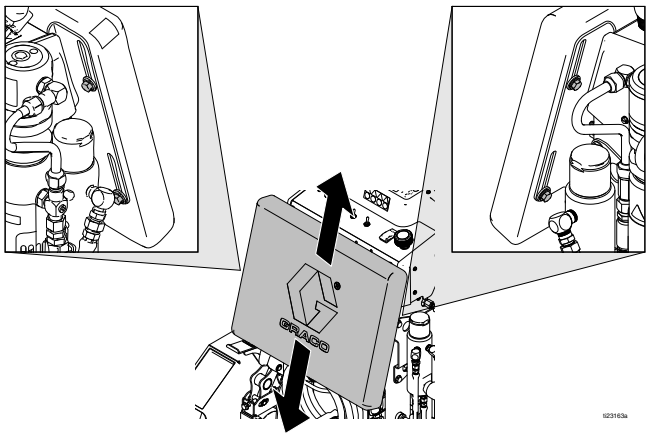

3. Tighten four bolts.

Smart Control Operation

Menu Tree

(LLV 250DC Shown)

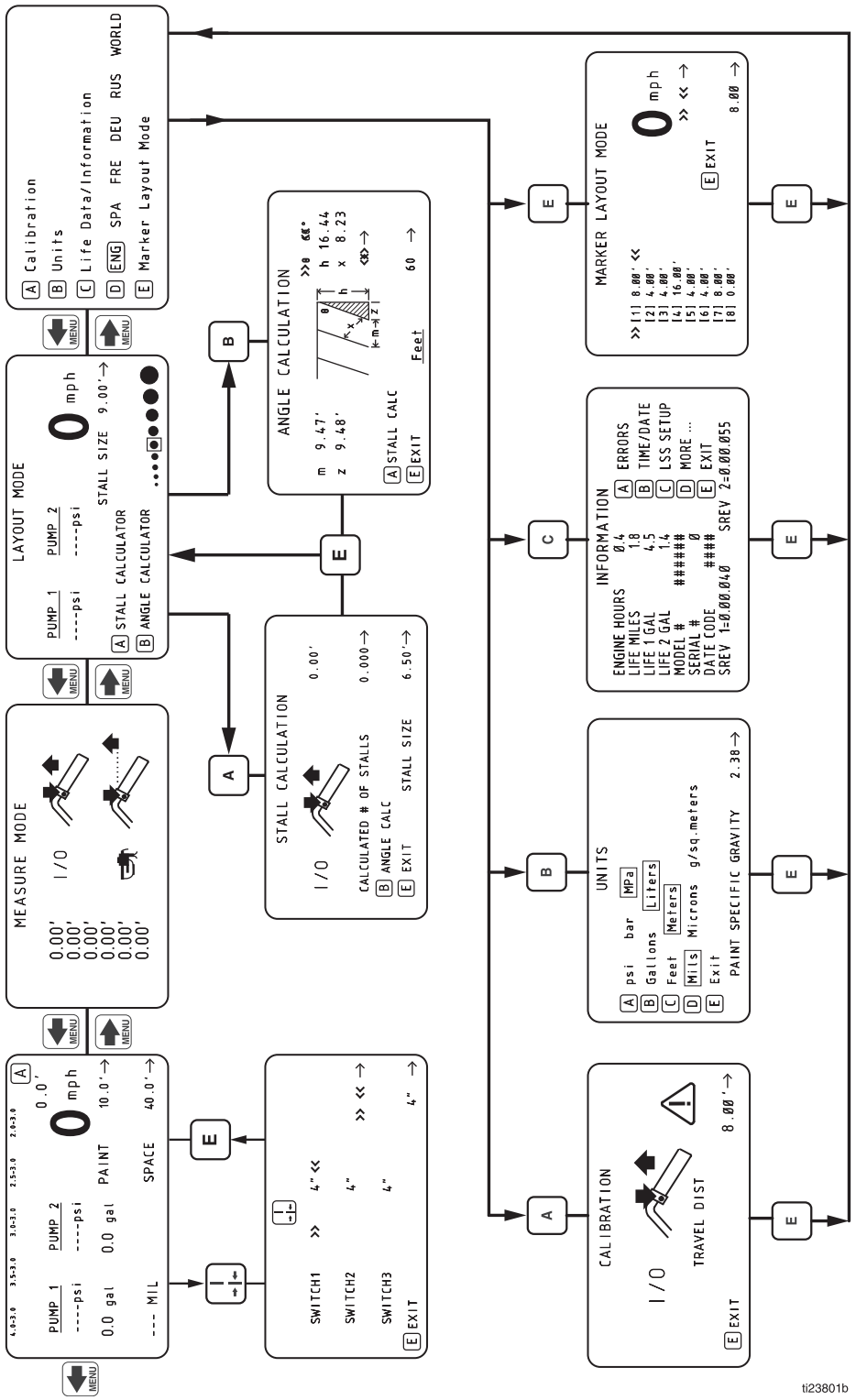

*LLV 250SPS displays information for only 1 pump.

Control Features

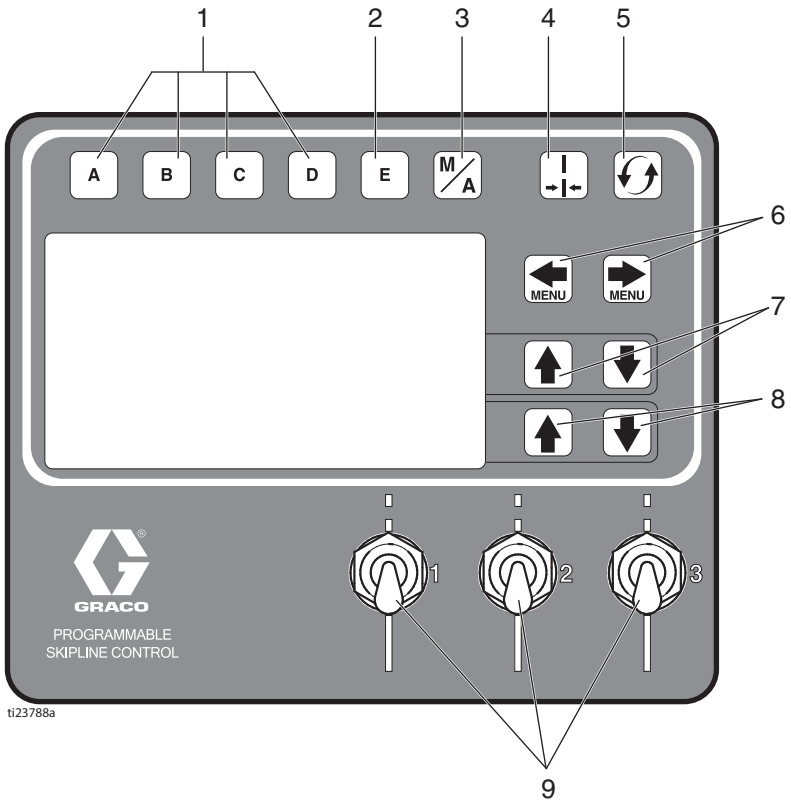

Ref.	Switch / Indicator	Explanation
1	Menu Controls	Provides menu specific commands as displayed on LCD screen. Provides skipline paint and space distance storage for instant change. Press and hold button to store pattern. Selects preset values “Favorite” or sub-menus.
2	Menu Control	Selects preset values or exits and returns to previous menu.
3	M/A button	Selects MANUAL or AUTOMATIC mode.
4	Line Width button	Input line width for MIL (thickness) calculation.
5	Reset button	Resets values to zero.
6	MENU arrow buttons	Used to switch between menus, adjusting values and resetting values. Scrolls through Striping Mode, Measure Mode, Layout Mode, and Setup/Information Menus.
7	Arrow buttons	Used in conjunction with the menus to adjust on-screen values. Adjusts adjacent values displayed.
8	Arrow buttons	Used in conjunction with the menus to adjust on-screen values. Adjusts adjacent values displayed.
9	Paint gun switches 1, 2 and 3	Enables/disables paint guns 1, 2 and 3. Up – skip line. Center – off. Down – continuous line.

Main Menus

Use MENU buttons ◀MENU ▶MENU to scroll thorough the four main menus.

Striping Mode

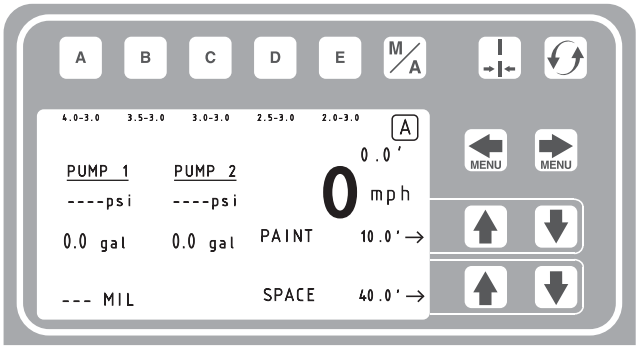

See **Striping Mode (LLV 250DC Shown)**, page 27 for features.
LLV 250DC shown
LLV 250SPS displays information for only 1 pump.

Measure Mode

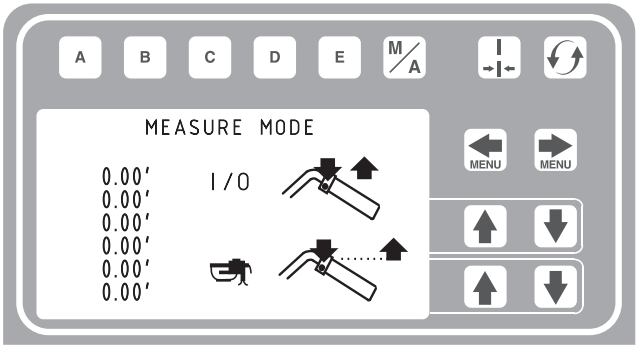

See **Measure Mode**, page 28 for features.

Layout Mode

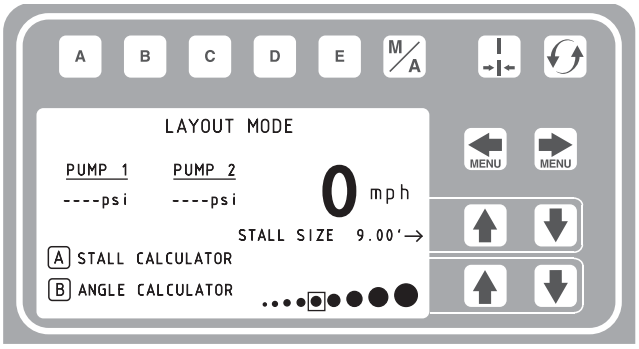

See **Layout Mode**, page 29 for features.
LLV 250DC shown
LLV 250SPS displays information for only 1 pump.

Setup/Information

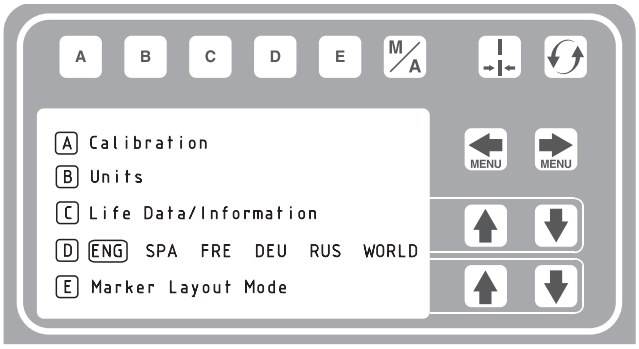

See **Setup/Information**, page 32 for features.

Initial Setup

The initial setup prepares the striper for operation based on a number of user entered parameters. Language selections and the units of measure selections can be set before you start or changed later.

Language

From Setup/Information select appropriate language by pressing D until the language is outlined.

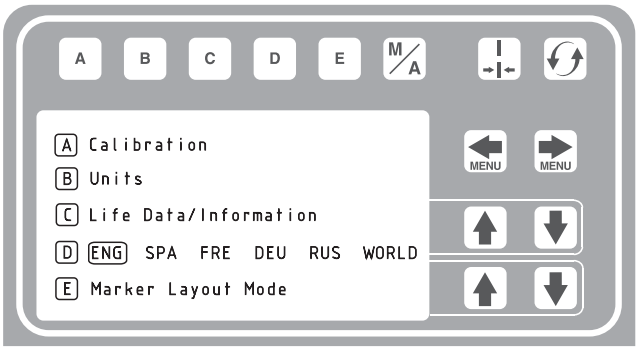

ENG = English
SPA = Spanish
FRE = French
DEU = German
RUS = Russian
WORLD = Symbols see **World Symbol Key**, page 36.

NOTE: Languages can also be changed later.

Units

Select appropriate units of measure.

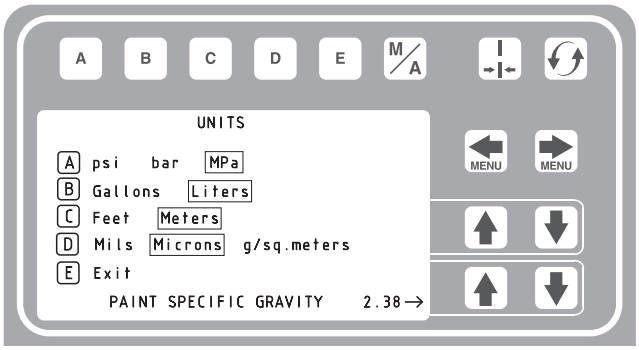

US Units
- Pressure = psi
- Volume = gallons
- Distance = feet
- Line Thickness = mil

SI Units
- Pressure = bar (MPa available)
- Volume = liters
- Distance = meters
- Line thickness = micron (g/m^2 available)

Paint Specific Gravity = Use UP and DOWN arrows to set specific gravity. Required to determine paint thickness.

NOTE: All units can be changed individually at any time.

Calibration

1. Check rear tire pressure 55 ± 5 psi (379 ± 34 kpa) and fill if necessary.
2. Remove and rotate calibration bar.

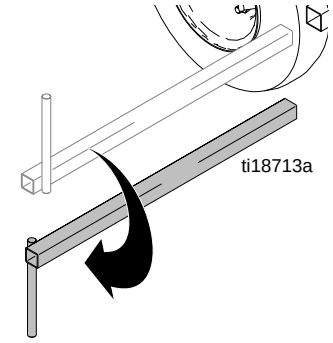

3. Insert calibration bar face down.

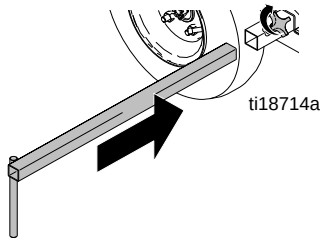

4. Tighten knob.

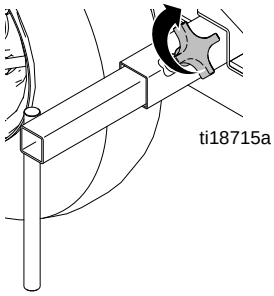

5. Extend steel tape to distance greater than 26 ft. (8m).

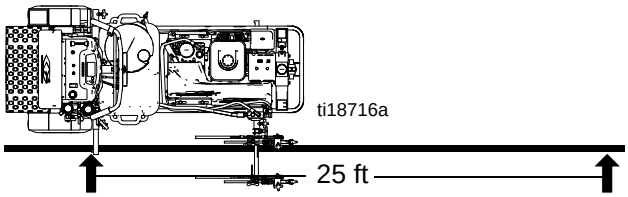

6. Press MENU MENU to select Setup/Information.

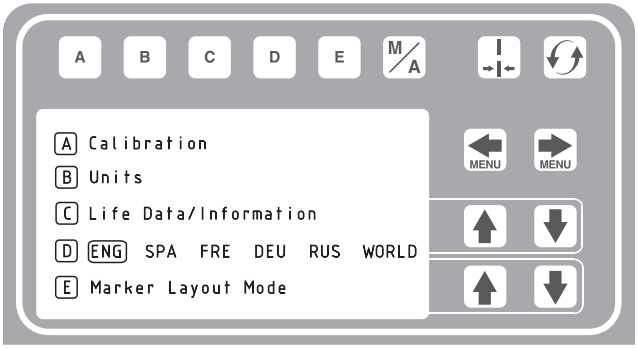

7. Press A for Calibration. Set TRAVEL DIST to 25 ft (7.6m) or longer. Longer distances ensure better accuracy, depending on conditions.

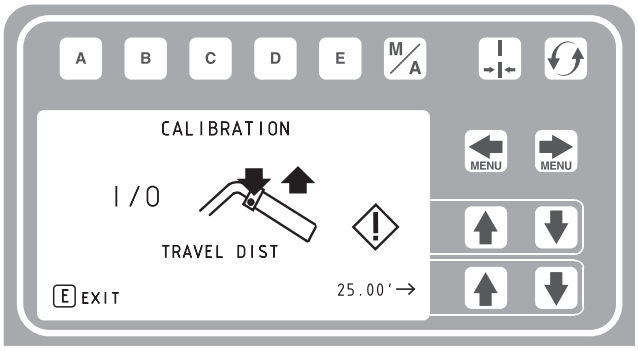

8. Align part of the unit with 1 foot (30.5cm) on steel tape.

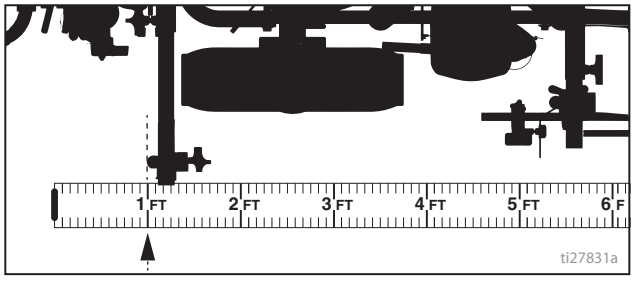

9. Push gun trigger control to start calibration.

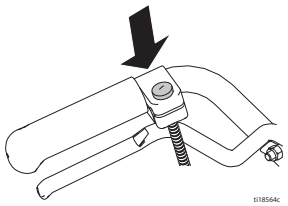

10. Move striper forward. Keep unit aligned with steel tape.

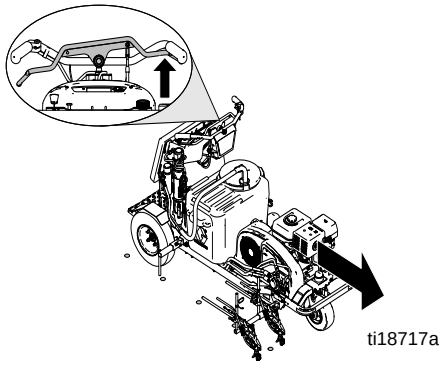

11. Stop when chosen part of unit aligns with 26-ft (8m), or distance entered, on steel tape (25-ft./ 7.6m distance).

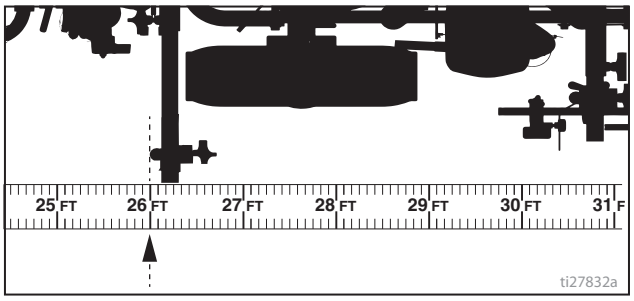

12. Push gun trigger control to complete calibration.

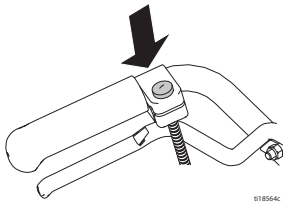

- Calibration is not complete when the exclamation symbol ⚠ is displayed.
- Calibration is finished when the check mark symbol ✓ is displayed.

13. Calibration is now complete.

Go to Measure Mode and verify accuracy by measuring the tape (see **Measure Mode**, page 28).

Striping Mode (LLV 250DC Shown)

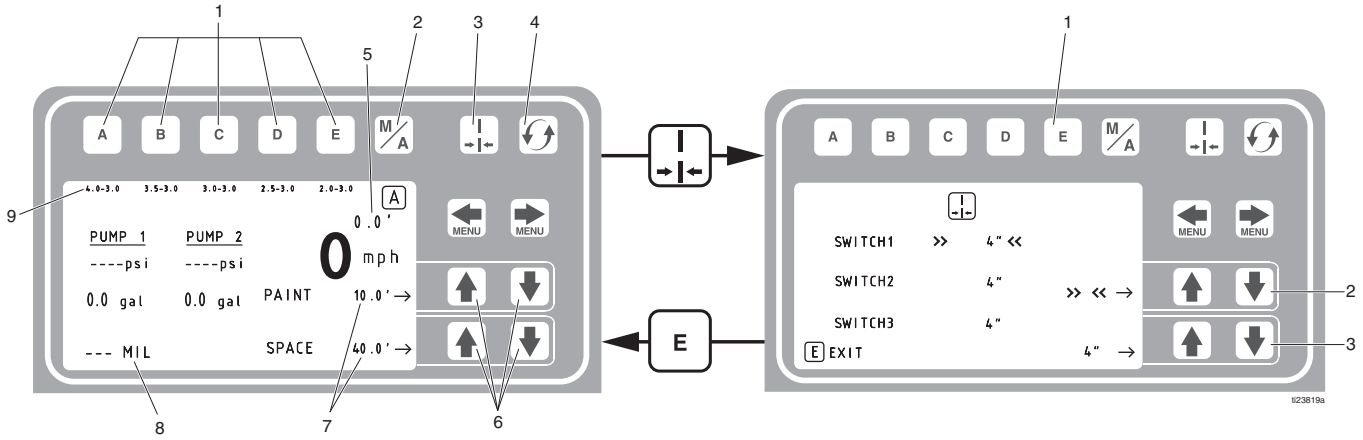

Ref.	Description
1	Select a “Favorite”, press for less than one second.
	Save a “Favorite”, press and hold for more than three seconds.
2	Cycles between Manual or Automatic Mode.
	Manual Mode: Press and hold gun trigger control to stripe.
	Automatic Mode: Press and release gun trigger control to start striping. Press and release button again to stop.
3	Line width button for MIL (thickness) calculation.
4	Resets “Job” values to zero.
5	Total line length sprayed.
6	Paint and Space length adjustment buttons.
7	Paint and Space distance that is sprayed if a switch is set to skip line.
8	MIL thickness. While spraying “Instant MIL avg” is displayed. When stopped total “Job MIL avg” is displayed.
9	Five skip line favorites

*LLV 250SPS displays information for only 1 pump.

Ref.	Description
1	Exits and returns to the Striping Mode Menu.
2	Select switch 1, 2, or 3.
3	Line Width Adjustment, if switch is operating more than one gun add the line widths together.

Operating in Striping Mode

Striper must be running and clutch engaged before activating gun trigger control.

1. Make sure engine is running and clutch switch is engaged.
2. Use gun selector switches to select guns and line type.
3. Activate gun trigger control to began spraying.

In Automatic Mode the striper has a low speed shutoff value of 0.6 MPH (1.0 kilometer/hour). The low speed shutoff value can be adjusted or disabled. See **Information**, page 33.

In Automatic Mode the [A] will flash when gun trigger control is pressed to signal mode is active.

Measure Mode

Measure Mode replaces a tape measure to measure distances when laying out an area to be striped.

1. Use MENU MENU to select Measure Mode.

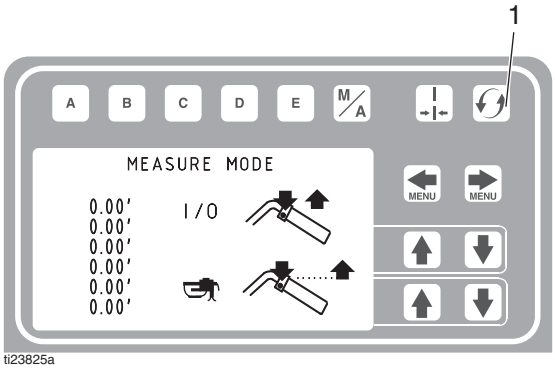

Ref.	Description
1	Hold to reset values to zero.

2. Press and release gun trigger control. Move striper forwards or backwards. (Moving backwards is a negative distance.)

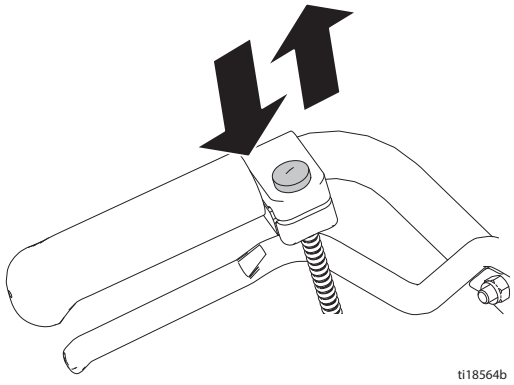

3. Press and release gun trigger control to end measured length. Up to six lengths are viewable.

The most recent measured length is also saved as the measured distance in the Stall Calculator display. See **Stall Calculator**, page 30.

Press and hold gun trigger control at any time to apply a dot. If trigger is held while striper is moving, a dot is marked every 12-inches (30.5cm).

Layout Mode

Layout Mode is used to calculate and mark parking lot stalls.

1. Use to select Layout Mode.

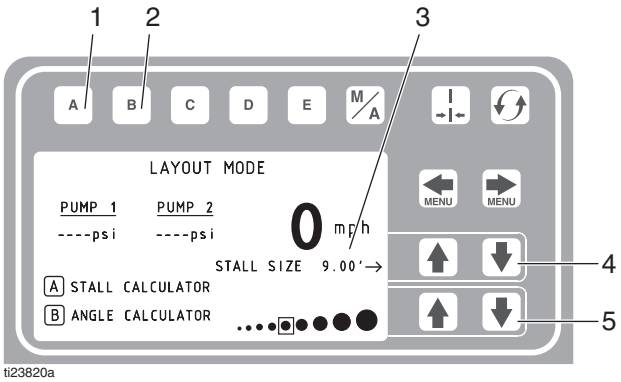

*LLV 250SPS displays information for only 1 pump.

Ref.	Description
1	Opens Stall Calculator Menu. See **Stall Calculator**, page 30.
2	Opens Angle Calculator Menu. See **Angle Calculator**, page 31.
3	Distance between dots laid by striper
4	Adjust stall size/dot spacing width.
5	Adjust dot size.

2. Press and release gun trigger control and move striper forward.

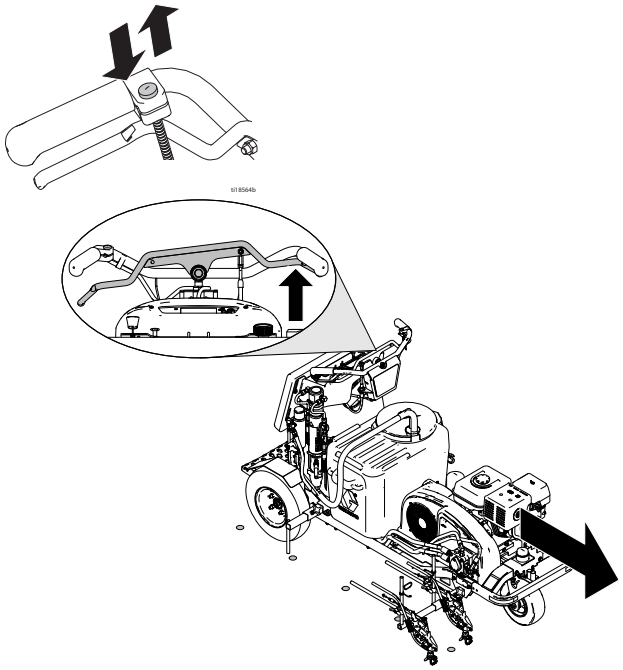

3. Striper default is to place a dot every 9.0 ft (2.7m) to mark the stall size. Stall size is adjustable.

4. Dots are laid down until gun trigger control is pressed and released again.

An indicator before and after Layout Mode on the screen alternately flash when gun trigger control is pressed to signal mode is active.

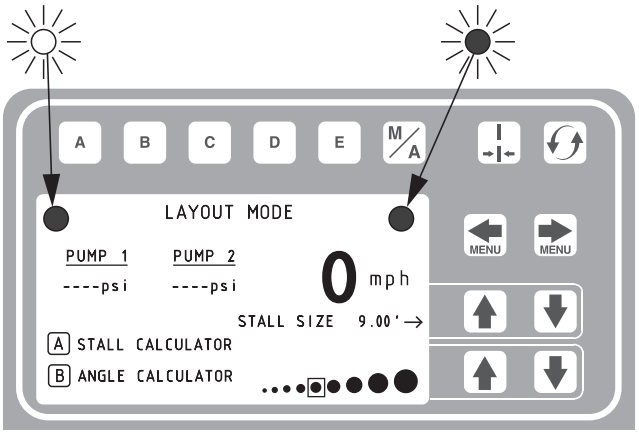

*LLV 250SPS displays information for only 1 pump.

Stall Calculator

Stall Calculator is used to set the stall size. The striper divides the measured length by the stall size to determine the number of stalls that will fit in the length measured.

1. Use MENU MENU to select Layout Mode. Press A to open Stall Calculator Menu.

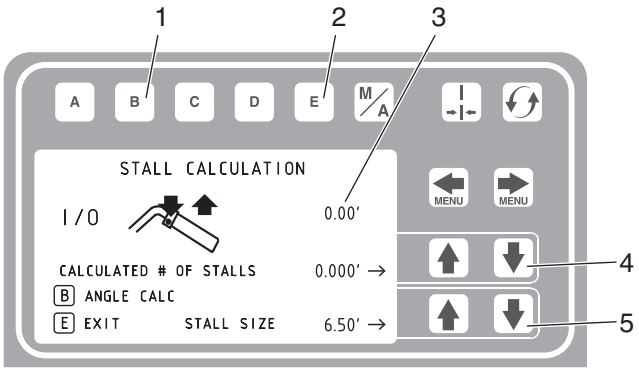

ti23821a

Ref.	Description
1	Opens Angle Calculator Menu. See **Angle Calculator**, page 31.
2	Exits and returns stall size to Layout Mode.
3	Measured distance.
4	Calculated # of stalls. Changing the number of stalls will change the stall size.
5	Stall size. Changing stall size changes the calculated # of stalls.

2. The most recent length measured in Measure Mode is displayed or press gun trigger control to start a new measurement. Press again to stop measuring.

   Stall size and calculated number of stalls are both adjustable.

3. Press E to return to Layout Mode. The Stall size is saved and displayed on the Layout Mode screen.

4. Press and release gun trigger control to start marking dots. Press and release gun trigger control again to stop.

Angle Calculator

Angle Calculator is used to determine the offset value and dot spacing value for a layout.

1. Use MENU MENU to select Layout Mode. Press B to open Angle Calculator Menu.

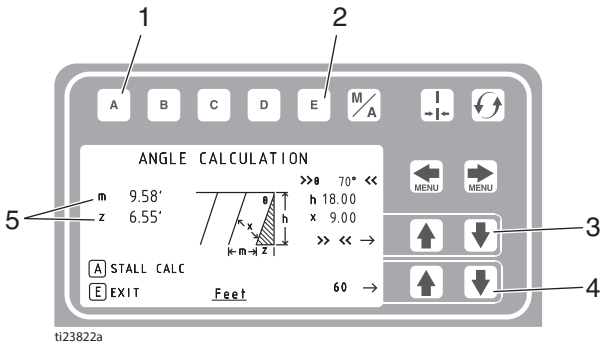

Ref.	Description
1	Opens Stall Calculator.
2	Exits and returns to Layout Mode.
3	Select θ, h, or x.
4	Adjust the parameter selected.
5	Calculated offset and dot spacing.

2. Dot spacing (m) and offset (z) are calculated based on the parameters entered:

   θ - Stall angle
   h - Depth of stall
   x - Stall size (width)ll

3. Measure and mark the offset distance (z) calculated for the first stall.

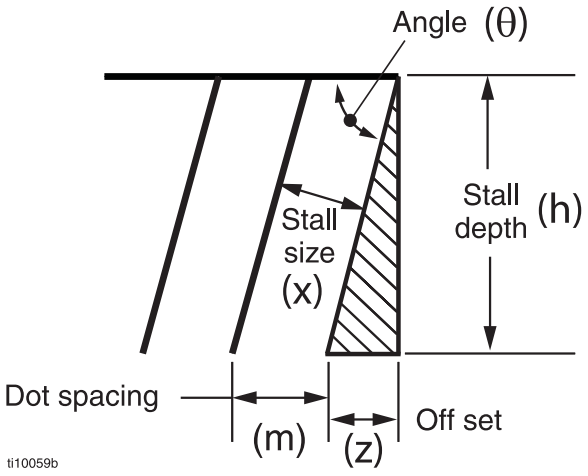

4. Press E to return to Layout Mode. The dot spacing value (m) is saved and displayed as stall size on the Layout Mode screen.

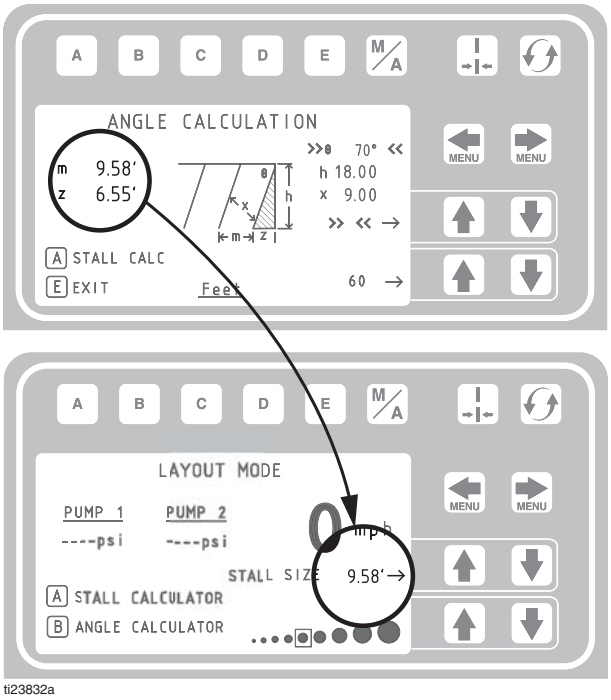

5. Press and release gun trigger control to start marking stall size dots. Press and release gun trigger control to stop marking.

Setup/Information

Use MENU MENU to select Setup/Information.

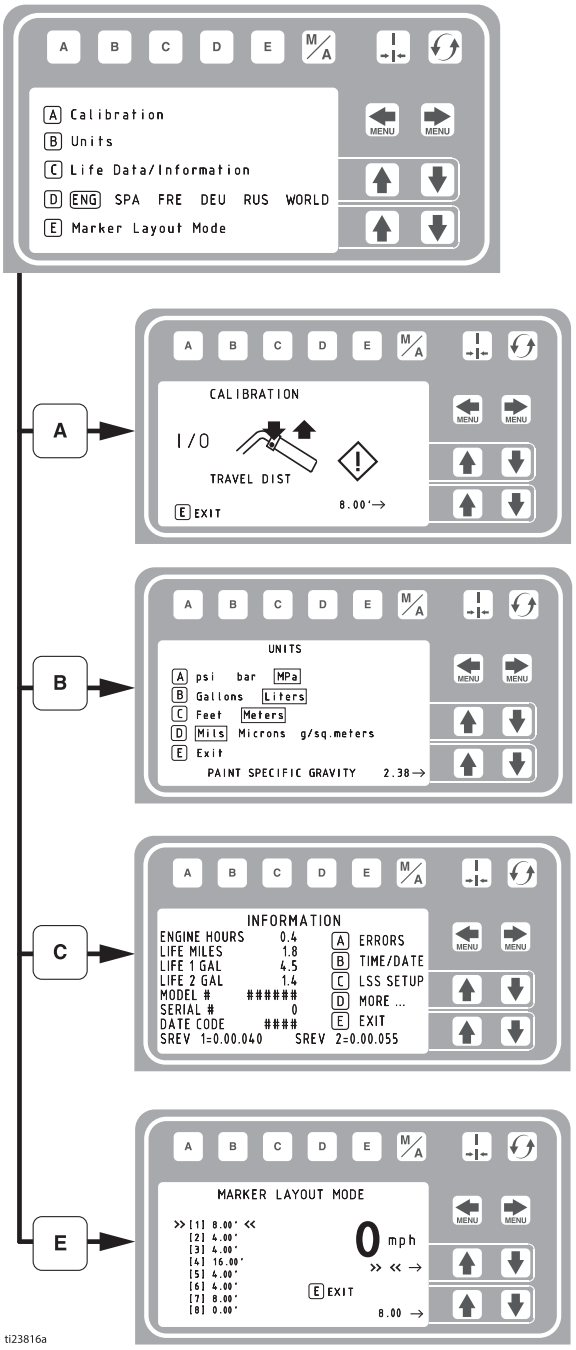

Press D to select Language.

See **Language**, page 25.

See **Calibration**, page 25.

See **Units**, page 25.

See **Information**, page 33.

See **Marker Layout Mode**, page 35.

Information

Use ◀MENU ▶MENU to select Setup/Information. Press C to open Information Menu.

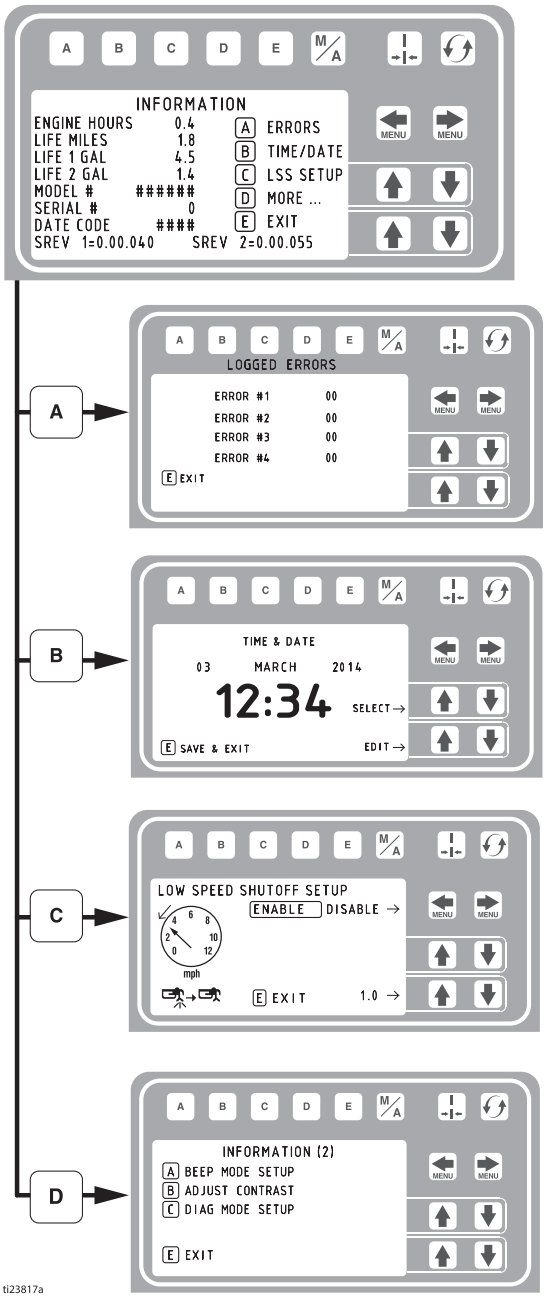

Displays and logs life data and striper information.

Logs last four error codes that occurred.

Code Description
02 = Over pressure on sensor #1
03 = No transducer #1 detected
22 = Over pressure on sensor #2
23 = No transducer #2 detected

Set time and date using arrow keys.

Use ◀MENU ▶MENU to enable or disable low speed shutoff when in Automatic Mode.

Use up and down arrows to adjust low speed shutoff value.

See **Information (2)**, page 34.

Information (2)

Use MENU MENU to select Setup/Information. Press C to open Information Menu. Press D to open Information (2) Menu.

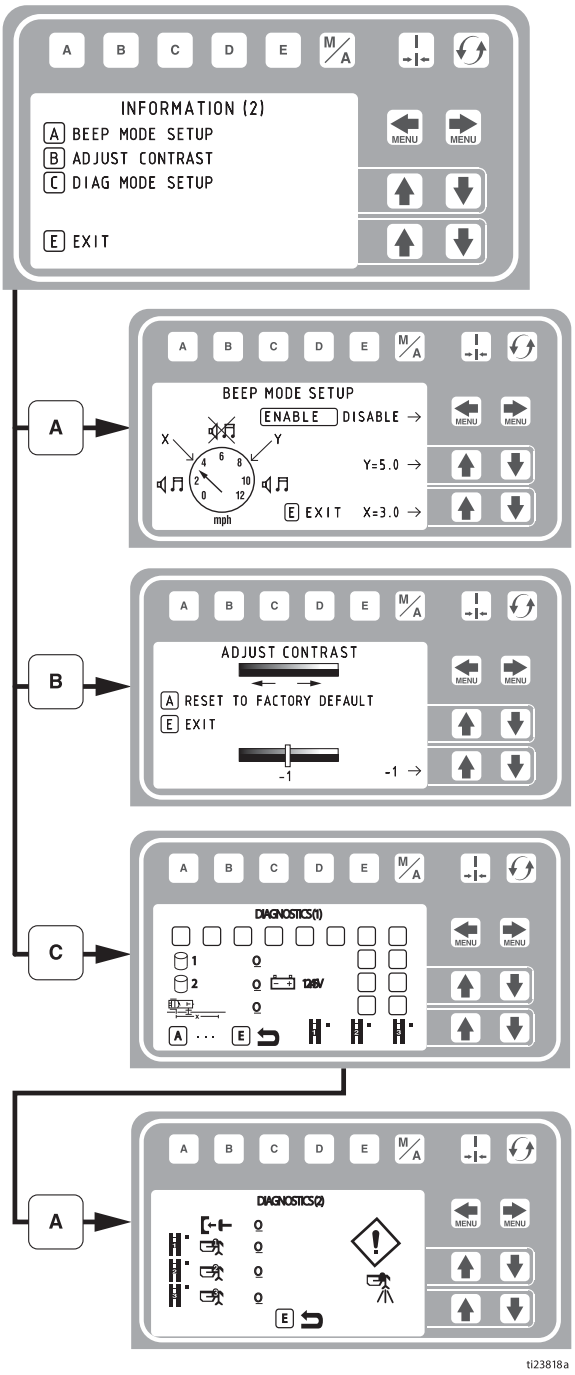

Set low speed limit (X) and high speed limit (Y). If you travel outside of these speeds while striping the striper will beep. Fast beep if traveling above the limit and a slow beep if traveling below the limit.

Adjust screen contrast to the desired value.

Used for Troubleshooting.

- Membrane Switch
- Wheel Sensor
- Gallon Counter
- Gun Switches

Used for Troubleshooting.

- Clutch
- Solenoids
- Caution Guns will Spray

Marker Layout Mode

The Measure Mode feature sprays a dot or a series of dots to mark an area.

1. Use MENU MENU to select Setup/Information. Press E to open Marker Layout Mode.

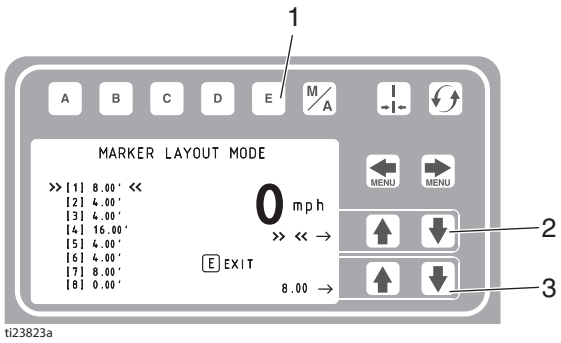

Ref.	Description
1	Exits and returns to Information Menu.
2	Select value to change.
3	Adjust spacing value.

2. Use arrow keys to set up a marker pattern.

3. Marker layout example shows a typical lane layout for reflective markers. Set space sizes up to eight consecutive measurements. By leaving zeros in any space, Marker Layout Mode will skip to the next measurement in a continuous loop.

   Some other uses of Marker Layout Mode are:

   - Multiple spaced handicap stall layout
   - Double line stalls

4. Set gun switch to skip line.

5. Press gun trigger control to start marking dots. Press gun trigger control again to stop.

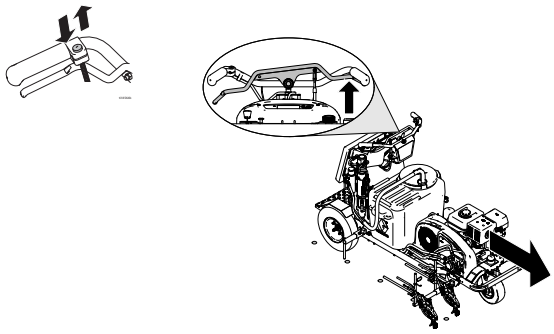

An indicator before and after Marker Mode on the screen alternately flash when gun trigger control is pressed to signal mode is active.

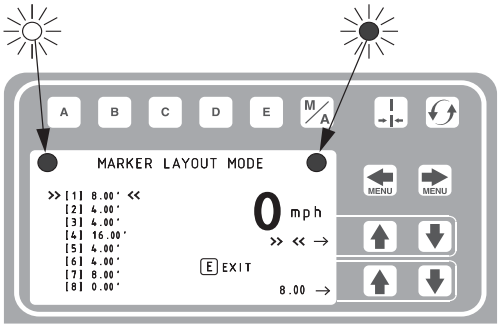

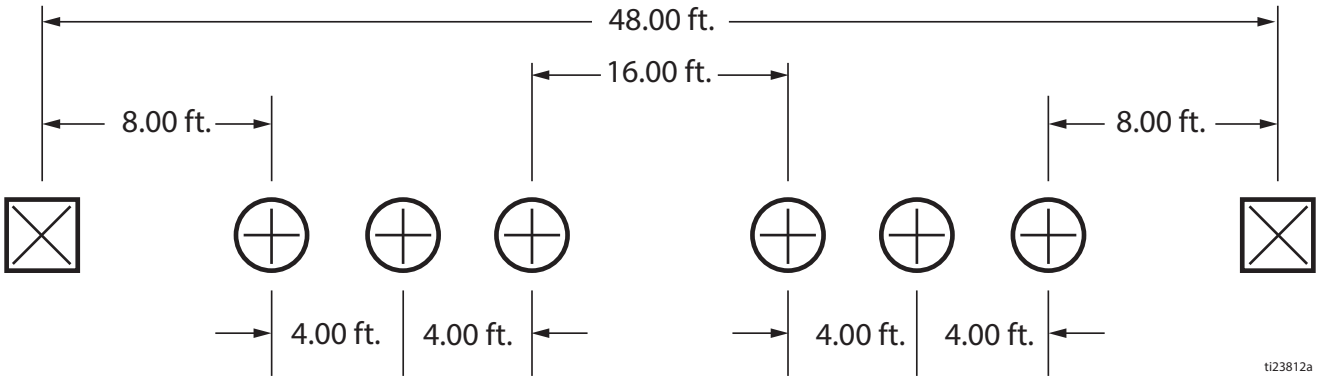

World Symbol Key

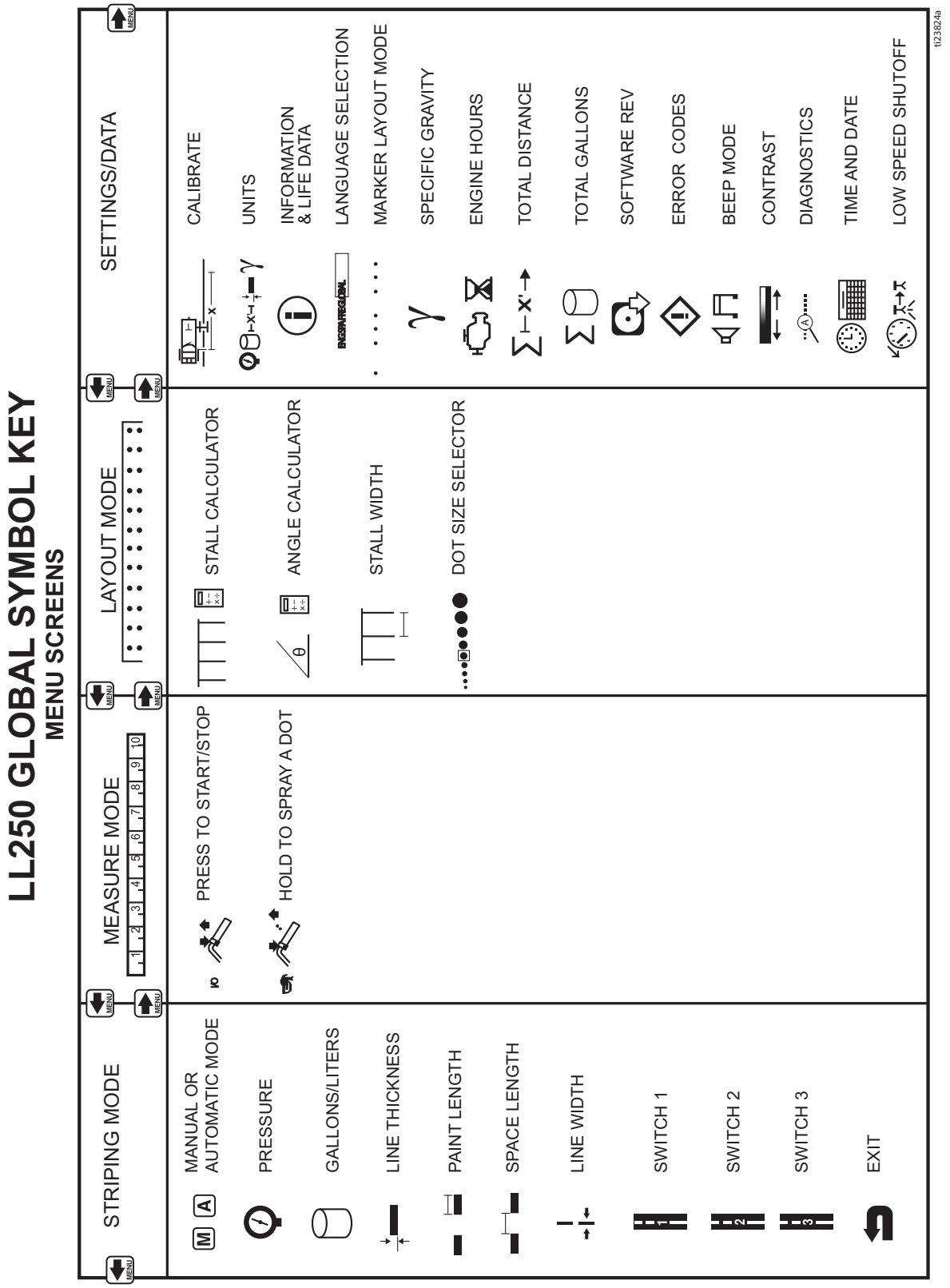

Hydraulic Oil/Filter Change

Removal

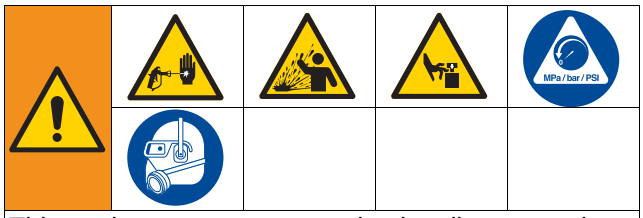

This equipment stays pressurized until pressure is manually relieved. To help prevent serious injury from pressurized fluid, such as skin injection, splashing fluid and moving parts, follow the Pressure Relief Procedure when you stop dispensing and before cleaning, checking, or servicing the equipment.

1. Perform **Pressure Relief Procedure**, page 9.
2. Place drip pan or rags under sprayer to catch hydraulic oil that drains out.
3. Remove drain plug. Allow hydraulic oil to drain.
4. Unscrew filter slowly - oil runs into groove and drains out rear.

Installation

1. Apply a light film of oil on filter gasket. Install drain plug and oil filter. Tighten oil filter 3/4 turn after gasket contacts base.
2. Fill with five quarts of Graco hydraulic oil 169236 (5 gallon/20 liter) or 207428 (1 gallon/3.8 liter).
3. Check oil level.

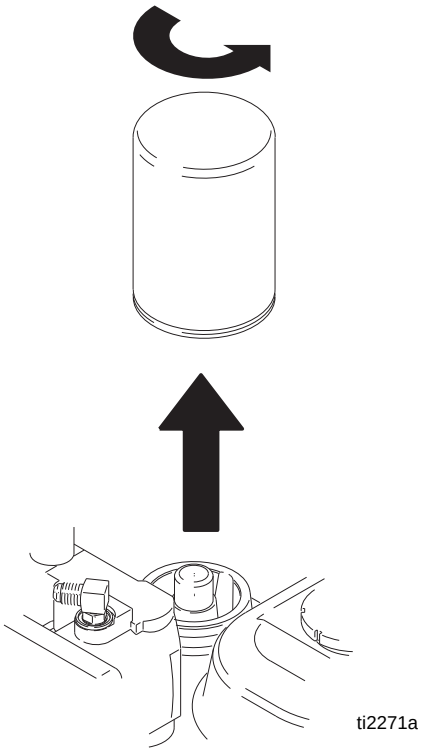

Technical Specifications

LineLazer V 250DC (Models 17H471, 17H472)		
	U.S.	**Metric**
Dimensions		
Height (with handle bar down)	Unpackaged - 50.5 in. Packaged - 63.5 in.	Unpackaged - 128.3 cm Packaged - 161.3 cm
Width	Unpackaged - 33.0 in. Packaged - 45.0 in.	Unpackaged - 83.8 cm Packaged - 114.3 cm
Length (with platform down)	Unpackaged - 73.5 in. Packaged - 78.0 in.	Unpackaged - 186.7 cm Packaged - 198.1 cm
Weight (dry - no paint)	Unpackaged - 752 lbs Packaged - 890 lbs	Unpackaged - 341 kg Packaged - 404 kg
Noise (dBa)		
Sound Power per ISO 3744:	103.1	
Sound Pressure measured at 3.3 feet (1m):	86.5	
Vibration (m/s^2) (8 hours daily exposure)		
Hand Arm (per ISO 5349)	1.6	
Whole Body (per ISO 2631)	0.4	
Power Rating (Horse Power)		
Power Rating (Horse Power) per SAE J1349	11.9 HP @ 3600 rpm	8.8 kW @ 3600 rpm
Maximum Delivery	2.5 gpm	9.5 lpm
Maximum Tip Size 1 gun 2 gun 3 gun	 .055 .039 .033	
Inlet paint strainer	16 mesh	1190 micron
Outlet paint strainer	50 mesh	297 micron
Pump inlet size	1 in. NSPM (m)	
Pump outlet size	3/8 NPT (f)	
Hydraulic reservoir capacity	1.25 gallons	4.73 liters
Maximum hydraulic pressure	1825 psi	124 bar
Maximum working pressure	3300 psi	228 bar, 22.8 MPa
Maximum forward speed	10 mph	16 kph
Maximum reverse speed	6 mph	9.7 kph
Electrical Capacity	14 A @ 3600 rpm	
Starting Battery	12V, 33Ah, Sealed lead acid	

Wetted Parts: PTFE, Nylon, polyurethane, V-Max, UHMWPE, fluoroelastomer, acetal, leather, tungsten carbide, stainless steel, chrome plating, nickel-plated carbon steel, ceramic

LineLazer V 250DC with Pressurized Bead System (Models 17H473, 17H474)		
	U.S.	**Metric**
Dimensions		
Height (with handle bar down)	Unpackaged - 55.7 in. Packaged - 63.5 in.	Unpackaged - 141.5 cm Packaged - 161.3 cm
Width	Unpackaged - 33.0 in. Packaged - 45 in.	Unpackaged - 83.8 cm Packaged - 114.3 cm
Length (with platform down)	Unpackaged - 73.5 in. Packaged - 78.0 in.	Unpackaged - 186.7 cm Packaged - 198.1 cm
Weight (dry - no paint or beads)	Unpackaged - 864 lbs Packaged - 1002 lbs	Unpackaged - 392 kg Packaged - 455kg
Noise (dBa)		
Sound Power per ISO 3744:	105.9	
Sound Pressure measured at 3.3 feet (1m):	89.1	
Vibration (m/s^2) (8 hours daily exposure)		
Hand Arm (per ISO 5349)	2.4	
Whole Body (per ISO 2631)	0.4	
Power Rating (Horse Power)		
Power Rating (Horse Power) per SAE J1349	11.9 HP @ 3600 rpm	8.8 kW @ 3600 rpm
Maximum Delivery	2.5 gpm	9.5 lpm
Maximum Tip Size 1 gun 2 gun 3 gun	 .055 .039 .033	
Inlet paint strainer	16 mesh	1190 micron
Outlet paint strainer	50 mesh	297 micron
Pump inlet size	1 in. NSPM (m)	
Pump outlet size	3/8 NPT (f)	
Hydraulic reservoir capacity	1.25 gallons	4.73 liters
Maximum hydraulic pressure	1825 psi	124 bar
Maximum working pressure	3300 psi	228 bar, 22.8 MPa
Maximum forward speed	10 mph	16 kph
Maximum reverse speed	6 mph	9.7 kph
Electrical Capacity	14 A @ 3600 rpm	
Starting Battery	12V, 33Ah, Sealed lead acid	

Wetted Parts: PTFE, Nylon, polyurethane, V-Max, UHMWPE, fluoroelastomer, acetal, leather, tungsten carbide, stainless steel, chrome plating, nickel-plated carbon steel, ceramic

LineLazer V 250SPS (Models 17H466, 17H467)		
	U.S.	**Metric**
Dimensions		
Height (with handle bar down)	Unpackaged - 55.7 in. Packaged - 63.5 in.	Unpackaged - 141.5 cm Packaged - 161.3 cm
Width	Unpackaged - 33.0 in. Packaged - 45 in.	Unpackaged - 83.8 cm Packaged - 114.3 cm
Length (with platform down)	Unpackaged - 73.5 in. Packaged - 78.0 in.	Unpackaged - 186.7 cm Packaged - 198.1 cm
Weight (dry - no paint or beads)	Unpackaged - 666 lbs Packaged - 769 lbs	Unpackaged - 302.1 kg Packaged - 348.8 kg
Noise (dBa)		
Sound Power per ISO 3744:	105.9	
Sound Pressure measured at 3.3 feet (1m):	89.1	
Vibration (m/s^2) (8 hours daily exposure)		
Hand Arm (per ISO 5349)	2.4	
Whole Body (per ISO 2631)	0.4	
Power Rating (Horse Power)		
Power Rating (Horse Power) per SAE J1349	11.9 HP @ 3600 rpm	8.8 kW @ 3600 rpm
Maximum Delivery	2.5 gpm	9.5 lpm
Maximum Tip Size 1 gun 2 gun 3 gun	 .055 .039 .033	
Inlet paint strainer	16 mesh	1190 micron
Outlet paint strainer	50 mesh	297 micron
Pump inlet size	1 in. NSPM (m)	
Pump outlet size	3/8 NPT (f)	
Hydraulic reservoir capacity	1.25 gallons	4.73 liters
Maximum hydraulic pressure	1825 psi	124 bar
Maximum working pressure	3300 psi	228 bar, 22.8 MPa
Maximum forward speed	10 mph	16 kph
Maximum reverse speed	6 mph	9.7 kph
Electrical Capacity	14 A @ 3600 rpm	
Starting Battery	12V, 33Ah, Sealed lead acid	

Wetted Parts: PTFE, Nylon, polyurethane, V-Max, UHMWPE, fluoroelastomer, acetal, leather, tungsten carbide, stainless steel, chrome plating, nickel-plated carbon steel, ceramic

LineLazer V 250SPS with Pressurized Bead System (Models 17H468, 17J951, 17H469)		
	U.S.	**Metric**
Dimensions		
Height (with handle bar down)	Unpackaged - 55.7 in. Packaged - 63.5 in.	Unpackaged - 141.5 cm Packaged - 161.3 cm
Width	Unpackaged - 33.0 in. Packaged - 45 in.	Unpackaged - 83.8 cm Packaged - 114.3 cm
Length (with platform down)	Unpackaged - 73.5 in. Packaged - 78.0 in.	Unpackaged - 186.7 cm Packaged - 198.1 cm
Weight (dry - no paint or beads)	Unpackaged - 778 lbs Packaged - 916 lbs	Unpackaged - 352.9 kg Packaged - 415.5 kg
Noise (dBa)		
Sound Power per ISO 3744:	105.9	
Sound Pressure measured at 3.3 feet (1m):	89.1	
Vibration (m/s^2) (8 hours daily exposure)		
Hand Arm (per ISO 5349)	2.4	
Whole Body (per ISO 2631)	0.4	
Power Rating (Horse Power)		
Power Rating (Horse Power) per SAE J1349	11.9 HP @ 3600 rpm	8.8 kW @ 3600 rpm
Maximum Delivery	2.5 gpm	9.5 lpm
Maximum Tip Size 1 gun 2 gun 3 gun	 .055 .039 .033	
Inlet paint strainer	16 mesh	1190 micron
Outlet paint strainer	50 mesh	297 micron
Pump inlet size	1 in. NSPM (m)	
Pump outlet size	3/8 NPT (f)	
Hydraulic reservoir capacity	1.25 gallons	4.73 liters
Maximum hydraulic pressure	1825 psi	124 bar
Maximum working pressure	3300 psi	228 bar, 22.8 MPa
Maximum forward speed	10 mph	16 kph
Maximum reverse speed	6 mph	9.7 kph
Electrical Capacity	14 A @ 3600 rpm	
Starting Battery	12V, 33Ah, Sealed lead acid	

Wetted Parts: PTFE, Nylon, polyurethane, V-Max, UHMWPE, fluoroelastomer, acetal, leather, tungsten carbide, stainless steel, chrome plating, nickel-plated carbon steel, ceramic

Graco Standard Warranty

Graco warrants all equipment referenced in this document which is manufactured by Graco and bearing its name to be free from defects in material and workmanship on the date of sale to the original purchaser for use. With the exception of any special, extended, or limited warranty published by Graco, Graco will, for a period of twelve months from the date of sale, repair or replace any part of the equipment determined by Graco to be defective. This warranty applies only when the equipment is installed, operated and maintained in accordance with Graco's written recommendations.

This warranty does not cover, and Graco shall not be liable for general wear and tear, or any malfunction, damage or wear caused by faulty installation, misapplication, abrasion, corrosion, inadequate or improper maintenance, negligence, accident, tampering, or substitution of non-Graco component parts. Nor shall Graco be liable for malfunction, damage or wear caused by the incompatibility of Graco equipment with structures, accessories, equipment or materials not supplied by Graco, or the improper design, manufacture, installation, operation or maintenance of structures, accessories, equipment or materials not supplied by Graco.

This warranty is conditioned upon the prepaid return of the equipment claimed to be defective to an authorized Graco distributor for verification of the claimed defect. If the claimed defect is verified, Graco will repair or replace free of charge any defective parts. The equipment will be returned to the original purchaser transportation prepaid. If inspection of the equipment does not disclose any defect in material or workmanship, repairs will be made at a reasonable charge, which charges may include the costs of parts, labor, and transportation.

THIS WARRANTY IS EXCLUSIVE, AND IS IN LIEU OF ANY OTHER WARRANTIES, EXPRESS OR IMPLIED, INCLUDING BUT NOT LIMITED TO WARRANTY OF MERCHANTABILITY OR WARRANTY OF FITNESS FOR A PARTICULAR PURPOSE.

Graco's sole obligation and buyer's sole remedy for any breach of warranty shall be as set forth above. The buyer agrees that no other remedy (including, but not limited to, incidental or consequential damages for lost profits, lost sales, injury to person or property, or any other incidental or consequential loss) shall be available. Any action for breach of warranty must be brought within two (2) years of the date of sale.

GRACO MAKES NO WARRANTY, AND DISCLAIMS ALL IMPLIED WARRANTIES OF MERCHANTABILITY AND FITNESS FOR A PARTICULAR PURPOSE, IN CONNECTION WITH ACCESSORIES, EQUIPMENT, MATERIALS OR COMPONENTS SOLD BUT NOT MANUFACTURED BY GRACO. These items sold, but not manufactured by Graco (such as electric motors, switches, hose, etc.), are subject to the warranty, if any, of their manufacturer. Graco will provide purchaser with reasonable assistance in making any claim for breach of these warranties.

In no event will Graco be liable for indirect, incidental, special or consequential damages resulting from Graco supplying equipment hereunder, or the furnishing, performance, or use of any products or other goods sold hereto, whether due to a breach of contract, breach of warranty, the negligence of Graco, or otherwise.

Graco Information

For the latest information about Graco products, visit www.graco.com.

For patent information, see www.graco.com/patents.

TO PLACE AN ORDER, contact your Graco distributor or call 1-800-690-2894 to identify the nearest distributor.

All written and visual data contained in this document reflects the latest product information available at the time of publication.
Graco reserves the right to make changes at any time without notice.

Original instructions. This manual contains English. MM 3A3393
Graco Headquarters: Minneapolis
International Offices: Belgium, China, Japan, Korea

GRACO INC. AND SUBSIDIARIES • P.O. BOX 1441 • MINNEAPOLIS MN 55440-1441 • USA
Copyright 2016, Graco Inc. All Graco manufacturing locations are registered to ISO 9001.
www.graco.com
Revision B, March 2016